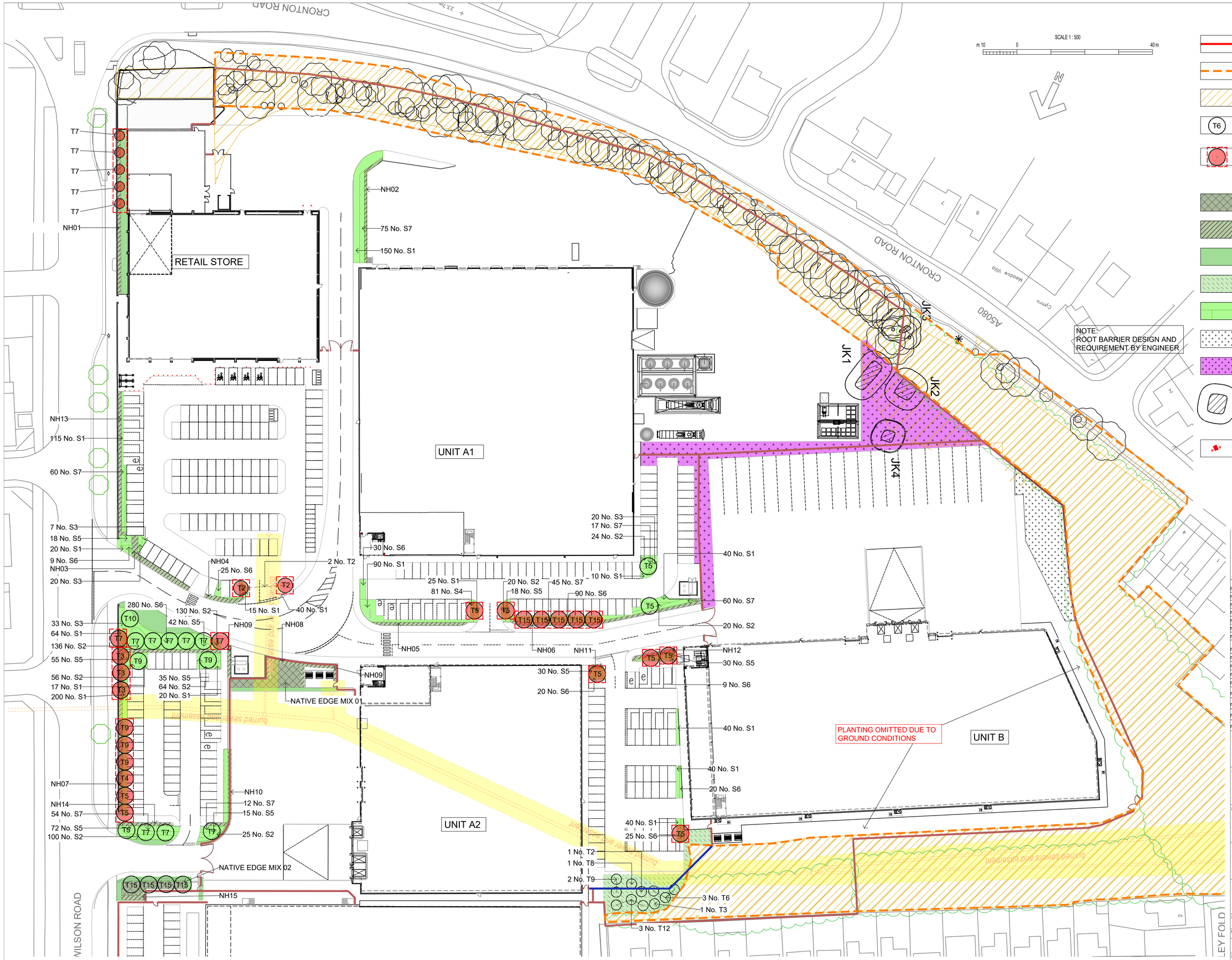

KEY

- SITE BOUNDARY
- TPO BOUNDARY (approximate)
- RETAINED WOODLAND
- PROPOSED NATIVE TREE PLANTING see schedule for details
- TREE WITH CELL ROOT SYSTEMS Trees to be planted in arbor urban tree planting system to provide 17m³ growing space.
- NATIVE EDGE MIX see schedule for details
- PROPOSED HEDGE PLANTING see schedule for details
- PROPOSED LAWN see schedule for details
- WILDFLOWER AREAS see schedule for details
- GROUND COVER/SHRUB PLANTING see schedule for details
- EXISTING SCRUB RETAINED
- PROPOSED NATIVE SCRUB
- JAPANESE KNOTWEED. REFER TO JAPANESE KNOTWEED SOLUTIONS DOCUMENTATION FOR DETAILS. NOTE: JK1,JK2 & JK3 TO BE 'REPLANTED' WITH NATIVE SCRUB MIX WHEN PERMITTED
- EV CHARGER

r16	Planting omitted to RHS parking area & re introduced adjacent Unit A1 Service Yard.	06/10/2026	AP
r15	Planting removed from retail unit car park.	16/09/2026	AP
r14	Updated to AJA 7182-041 Rev D	09/09/2026	AP
r13	Minor amendments	12/01/2026	AP
r12	Junction LSCP omitted until agreement with LPA	04/11/2025	AP
r11	Minor amendments / Junction Planting extracted	22/10/2025	AP
r10	Planting updated	11/08/2025	AP
r9	Updated to 7182-401 Rev P06. Japanese knotweed locations added.	01/08/2025	AP
r8	Planting updated	19/02/2025	AP
r7	Updated	10/12/2024	AP
r6	Updated to 13579-AEW-S1-XX-DR-A-1103 - 06/08/2024		AP
r5	Updated to 13579-AEW-XX-XX-DR-A-0503-P15 - 06/08/2024		AP
r4	Updated in response to LPA comments - 17/07/2024		AP
r3	Planting updated - 23/02/2024		AP
r2	Updated layout -4/10/2023		AP
r1	Issued for comment - 29/09/2023		AP

NOTE:
1. Do not scale from this drawing.
2. All setting out, levels and dimensions to be agreed on site.
3. The dimensions of all materials must be checked on site before being laid out.

Client: DAVOS Property Developments Ltd.

Project: Sovereign Phase 2 Huyton

Title: Planting Plan

AMENITYTREE
ENVIRONMENTAL PLANNING CONSULTANTS
Willow Cottage, School Lane, Burdwarsley, CH3 9NX. 01829 770 075

Status: For Comment

First Issued: SEP 2023 | Drawn: AP

Scale: 1:500 | Size: A1

Drawing No.: AT.23.1288.101r16

PLANTING SCHEDULE

PLANT SCHEDULE_r15.

REF.	TYPE	NO.	GIRTH cm	%	HEIGHT cm	TYPE	DENSITY	NOTE
1.0	**NATIVE TREE PLANTING**							
T1	Acer campestre.	0	16-18	NA	325-375	RB	NA	2 stakes / cross member / tie & Greentech Mona Irrigation System / 75lt Ltr Tree Irrigation bag.
T2	Betula pendula Fastigiata Joes.	3	16-18	NA	350-400	RB	NA	2 stakes / cross member / tie & Greentech Mona Irrigation System / 75lt Ltr Tree Irrigation bag.
T3	Carpinus betulus Trans Fontaine.	4	16-18	NA	325-375	RB	NA	2 stakes / cross member / tie & Greentech Mona Irrigation System / 75lt Ltr Tree Irrigation bag.
T4	Crataegus monogyna.	1	8-10.	NA	200-250	RB / FTH	NA	Single low stake / Greentech Mona Irrigation System / 75Ltr Tree Irrigation bag.
T5	Prunus sargentii Rancho.	11	16-18	NA	350-400	RB	NA	2 stakes / cross member / tie & Greentech Mona Irrigation System / 75lt Ltr Tree Irrigation bag.
T6	Quercus ilex.	3	12-14.	NA	250-300	RB	NA	2 stakes / cross member / tie & Greentech Mona Irrigation System / 75lt Ltr Tree Irrigation bag.
T7	Pyrus chanticleer.	15	16-18	NA	325-375	RB	NA	2 stakes / cross member / tie & Greentech Mona Irrigation System / 75lt Ltr Tree Irrigation bag.
T8	Quercus robur.	1	16-18	NA	325-375	RB	NA	2 stakes / cross member / tie & Greentech Mona Irrigation System / 75lt Ltr Tree Irrigation bag.
T9	Prunus avium.	5	8-10.	NA	200-250	RB / FTH	NA	Single low stake / Greentech Mona Irrigation System / 75Ltr Tree Irrigation bag.
T10	Acer x freemanii 'Jeffersred'.	1	20-25	NA	435-500	RB	NA	Underground guyed & Greentech Mona Irrigation System / 75Ltr Tree Irrigation bag.
T11	Fagus sylvatica.	0	8-10.	NA	200-250	RB / FTH	NA	Single low stake / Greentech Mona Irrigation System / 75Ltr Tree Irrigation bag.
T12	Ilex aquifolium.	2	8-10.	NA	200-250	RB / FTH	NA	Single low stake / Greentech Mona Irrigation System / 75Ltr Tree Irrigation bag.
T13	Tilia cordata Greenspire.	0	16-18	NA	325-375	RB	NA	2 stakes / cross member / tie & Greentech Mona Irrigation System / 75lt Ltr Tree Irrigation bag.
T14	Tilia cordata.	0	16-18	NA	325-375	RB	NA	2 stakes / cross member / tie & Greentech Mona Irrigation System / 75lt Ltr Tree Irrigation bag.
T15	Fagus sylvatica Dawyck.	9	16-18	NA	325-375	RB	NA	2 stakes / cross member / tie & Greentech Mona Irrigation System / 75lt Ltr Tree Irrigation bag.

2.0 NATIVE EDGE MIX

	NEM_01 NO.	NEM_02 NO.	GIRTH	HEIGHT	%	TYPE	DENSITY	NOTE
Amelanchier lamarckii.	13	6	7	NA	50cm	5	BR	1 / m2. 75cm biodegradable grow tube / stake.
Cornus sanguinea.	23	11	12	NA	50cm	10	BR	1 / m2. 75cm biodegradable grow tube / stake.
Euonymous europaeus.	23	11	12	NA	50cm	10	BR	1 / m2. 75cm biodegradable grow tube / stake.
Ligustrum vulgare.	13	6	7	NA	50cm	5	BR	1 / m2. 75cm biodegradable grow tube / stake.
Rosa canina.	23	11	12	NA	25cm	10	BR	1 / m2. 50cm biodegradable grow tube / stake.
Rosa pimpinellifolia.	13	6	7	NA	25cm	5	BR	1 / m2. 50cm biodegradable grow tube / stake.
Quercus robur.	23	11	12	NA	50cm	10	BR	1 / m2. 75cm biodegradable grow tube / stake.
Tilia cordata.	13	6	7	NA	50cm	5	BR	1 / m2. 75cm biodegradable grow tube / stake.
Sorbus aucuparia.	23	11	12	NA	50cm	10	BR	1 / m2. 75cm biodegradable grow tube / stake.
Taxus baccata.	13	6	7	NA	75cm	5	BR	1 / m2. 100cm biodegradable grow tube / stake.
Virburnum latana.	23	11	12	NA	50cm	10	BR	1 / m2. 75cm biodegradable grow tube / stake.
Viburnum opulus.	23	11	12	NA	50cm	10	BR	1 / m2. 75cm biodegradable grow tube / stake.
Ulex europaeus.	13	6	7	NA	50cm	5	BR	1 / m2. 75cm biodegradable grow tube / stake.

Planting Notes:
a) Density - The above to be planted at a rate of 1no. Plants per m2, in groups of between 3 and 7.
b) Grow Tubes - All to be planted in biodegradable black growing tubes, 25cm taller than planting height with support.
c) Fertiliser - Organic Scotts N-Mag Lite by Greenwich. To be applied at manufacturers recommended rates.
d) Slow Release fertilser - Agroblend Tablets or simialr approved. To be applied at manufacturers recommended rates.
e) Amelirorant - Peat Free Compost, 7ltrs per plant, Rootgrow Professional or similar approved. To be applied at manufacturers recommended rates.
f) Mycorrhizal Fungi - As supplied by Plant Works UK or similar approved. To be applied at manufacturers recoomened rates.

3.0 NATIVE HEDGE PLANTING	TOTAL	NH_01	NH_02	NH_03	NH_04	NH_05	NH_06	NH_07	NH_08	NH_09	NH_10	NH_11	NH_12	NH_13	NH_14	NH_15	GIRTH	HEIGHT cm	%	TYPE	DENSITY	NOTE
Acer campestre.	241	24	20	13	7	13	30	40	12	15	12	3	6	23	8	15	NA	60-80	10	BR	NA	1+2 Transplant / 3 breaks / 100cm biodegradable grow tube / stake.
Carpinus betulus.	120	12	10	7	4	7	15	20	6	7	6	1	3	11	4	7	NA	60-80	5	BR	NA	1+2 Transplant / 3 breaks / 100cm biodegradable grow tube / stake.
Corylus avellana.	231	24	10	13	7	13	30	40	12	15	12	3	6	23	8	15	NA	60-80	10	BR	NA	1+2 Transplant / 3 breaks / 100cm biodegradable grow tube / stake.
Crataegus monogyna.	1452	144	120	75	45	81	180	240	75	90	75	15	39	135	48	90	NA	60-80	60	BR	NA	1+2 Transplant / 3 breaks / 100cm biodegradable grow tube / stake.
Ilex aquifolium.	363	36	30	20	13	20	45	60	18	22	18	4	9	34	12	22	NA	30-45	15	BR	NA	50cm biodegradable grow tube / stake.

Planting Notes:
a) To be planted in a double staggered row @ 5 plants per Lm.
b) Grow Tubes - All to be planted in biodegradable black growing tubes, 25cm taller than planting height with support.
c) Fertiliser - Organic Scotts N-Mag Lite by Greenwich. To be applied at manufacturers recommended rates.
d) Slow Release fertiliser - Agroblend Tablets or simialr approved. To be applied at manufacturers recommended rates.
e) Amelirorant - Peat Free Compost, 7ltrs per plant, Rootgrow Professional or similar approved. To be applied at manufacturers recommended rates.
f) Mycorrhizal Fungi - As supplied by Plant Works UK or similar approved. To be applied at manufacturers recoomened rates.

4.0 SHRUBS & GROUNDCOVER PLANTS	NO.	GIRTH	HEIGHT cm	%	TYPE	DENSITY	NOTE
S1 Prunus laurocerasus Zabeliana.	812	NA	20-30	NA	3L	4 / m2	
S2 Pittosporum tenufolium Tom Thumb.	578	NA	20-30	NA	3L	4 / m2	
S3 Lavandula angustifolia 'Rosea'.	80	NA	45-60	NA	3L	4 / m2	
S4 Escallonia SlieveDonard.	21	NA	30-45	NA	3L	3 / m2	
S5 Pennesitum vollosum.	330	NA	30-45	NA	3L	3 / m2	
S6 Stipa tenuissima.	544	NA	30-45	NA	3L	3 / m2	
S7 Cornus alba Elegantissima.	285	NA	30-45	NA	3L	3 / m2	

5.0 WILDFLOWER AREAS

5.1 To be seeded with Emorsgate EM4. - Meadow mixture for clay soils @ 40kg per ha.

6.0 PROPOSED NATIVE SCRUB

Betula nana.	180	NA	10	100	BR	2/m2	Rabbit spiral protection.	300
Carpinus betulus.	270	NA	15	150-175	BR	2/m2	Feathered / Single low stake / rabbit spiral protection.	450
Cornus sanguinea.	90	NA	5	100	BR	2/m2	Rabbit spiral protection.	150
Corylus avellana.	630	NA	35	100	BR	2/m2	Rabbit spiral protection.	1050
Pinus sylvestris.	180	NA	10	100	RB	2/m2	Rabbit spiral protection.	300
Prunus avium.	270	NA	15	100	BR	2/m2	Rabbit spiral protection.	450
Crataegus monogyna.	90	NA	5	100	BR	2/m2	Rabbit spiral protection.	150
Prunus spinosa.	90	NA	5	100	BR	2/m2	Rabbit spiral protection.	150

Areas to be:
1) 80% planting.
2) 2 Plants per m2.
3) 20% Open space.
4) Open spaces to be seeded with Emorsgate Seeds EG10 Tussock Grass Mixture.

7.0 BARK MULCH

7.1 Install 75mm layer of chipped bark mulch to :
a) Native edge mix areas.
b) Native hedgerows.
c) Proposed native scrub areas.
d) Ornamental shrub areas.

PLANTING NOTES

1. Plant handling at the nursery and transit up to delivery, shall be in accordance with 'Plant Handling' the booklet is published by the Committee for Plant Supply and Establishment (CPSE). The contractor shall comply with clauses 3 & 4 of the above booklet (obtained from The Horticultural Trades Association which refers to the receipt, uploading and temporary storage of plants.
2. Plants shall be first class examples of their species or variety, free from all pests and diseases with good fibrous root systems and materially undamaged. Refer to relevant sections of BS.3936.Pts 1- 4, Specification of Nursery Stock.
3. All planting is to in general compliance with BS.4428:1989 Code of Practice for General Landscape Operations.
4. All trees are to be underground guyed. All tree pits to be 100x100x75cm deep. Back fill, 65cm 70% by volume approved topsoil, 30% by volume tree compost (no peat products), 10cm coarse sand to base of pit. Base of pit to be broken up prior to backfilling and tested for drainage properties.
5. The contractor must ascertain for themselves the exact location of any underground services prior to excavations. Root barriers (to engineers details) shall be installed adjacent to any underground services and between tree and adjacent buildings or structures if the tree is within 10m.
6. Water as necessary prior to and post PC to end of maintenance period to ensure the establishment and continued healthy development.
7. Carry out all work when soil and weather conditions are suitable. Do not plant during periods of frost or strong winds. Plant only during the following periods_Bare root material : Late October to Late March, Container / Air pot material : Anytime ground and weather conditions permit. Ensure adequate watering and weed control is available.
8. Any tree or shrub that dies, appears unhealthy or poorly developed shall be replaced at the end of the 12 months maintenance and defects period during the next appropriate planting season.

TOPSOILING

1. All topsoil delivered shall be in accordance with BS.3882.2007, certified as such. Sample load to be delivered to site for CA approval.
2. Turfed lawn areas to receive 150mm depth of approved topsoil (after light consolidation).
3. Shrub areas to receive 400mm depth of approved topsoil (after light consolidation).
4. Hedgerows to receive 450mm depth of approved topsoil (after light consolidation).
5. Wild flower areas are not top soiled. Any level make up to achieve via subsoil to BS.8601.2013.

TURFING

1. Turf to be laid over a minimum 150mm lightly consolidated approved topsoil. No turf shall be laid in frosty or exceptionally dry weather. The well being of the turf is the contractors responsibility prior to PC and for the duration of the maintenance period. Any failures shall be replaced at the contractors expense.
2. Prior to the installation of the topsoil subsoil shall be rotavated. Lightly cultivate the topsoil, harrow and rake topsoil into a fine tilth suitable for final grading prior to turfing.Rake to a true, even consolidated surface.
3. Turf shall be grown by a member of the Turfgrass Growers Association (TGA). Certification of its provence shall be supplie to the CA.
4. Turf shall be laid within 36 hours of delivery and immediately watered after laying. Bumps, ridges and depressions will not be accepted.

WILDFLOWER AREAS

1. No topsoil is required within wildflower seeding areas. Seed should be sown into good quality, clay free subsoil. Cutivate to 150mm depth and all weeds, stones and deleterious material larger than 35mm in any direction shall be removed. Cultivated seed bed shall be rolled and raked to produce a tilth 25mm deep. Allow germination of existing seed bank. After 2-3 weeks spray regrowth with an approved selective herbicide. Allow to die back and rake off. Lightly water and seed late August or September or April - May. All seeding to be sown at the suppliers recommended rate.
2. First cut shall be August to September and lightly the following spring using a flail mower or strimmer. All cuttings to be raked up and disposed of off site.
3. Subsequent cuts upon completion of flowering in October with flail or strimmer with arisings removed.

r14	Planting schedule updated 06/10/2026	AP
r13	Planting removed from retail unit car park. 16/09/2026	AP
r12	Updated to AJA 7182-041 Rev D 09/09/2026	AP
r11	Planting schedule updated 12/01/2026	AP
r10	Planting schedule updated 12/08/2025	AP
r9	Planting schedule updated 11/08/2025	AP
r8	Planting schedule updated 19/02/2025	AP
r7	Planting schedule updated 10/12/2024	AP
r6	Planting schedule updated 14/11/2024	AP
r5	Planting schedule updated 16/08/2024	AP
r4	Planting schedule updated 17/07/2024	AP
r3	Planting schedule updated 23/02/2024	AP
r2	Updated to revised layout 4/10/2023	AP
r1	Issued for comment - 29/09/2023	AP

NOTE:
1. Do not scale from this drawing.
2. All setting out, levels and dimensions to be agreed on site.
3. The dimensions of all materials must be checked on site before being laid out.

Client:
DAVOS
Property Developments Ltd.

Project:
Sovereign Phase 2
Huyton

Title:
Planting Notes & Schedule

AMENITYTREE
ENVIRONMENTAL PLANNING CONSULTANTS
Willow Cottage, School Lane, Burdwarsley, CH3 9NX. 01829 770 075

Status: For Comment
First Issued: SEP 2023 | Drawn: AP
Scale: N/A | Size: A1
Drawing No.: AT.23.1288.102r14

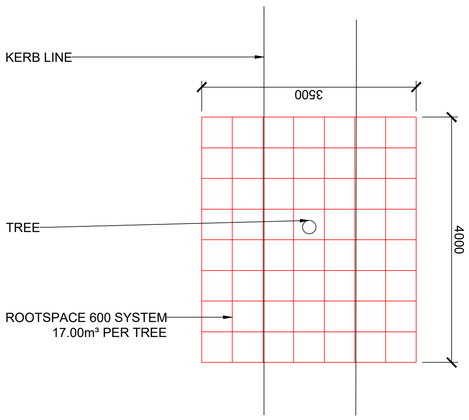

DETAIL 1 PLAN 1:50

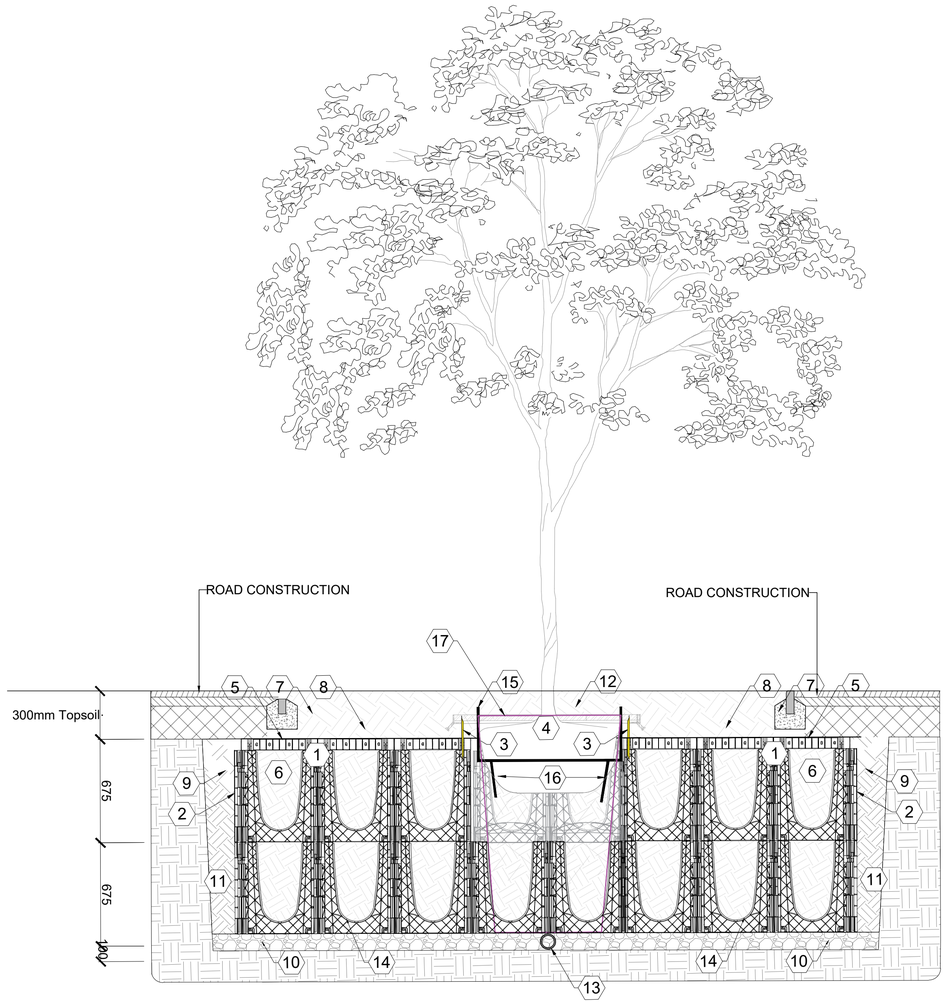

NOTE: PIT DETAIL SUBJECT TO ON SITE PERCOLATION TEST AND CONFIRMATION OF ACTIVE DRAINAGE CONNECTION.
TREE PIT DETAIL TO BE MODIFIED AS REQUIRED TO ENSURE ROOTBALL DOES NOT SIT IN WATER.

17.0m³ OF VOLUME PROVIDED

NOTES

1. PRIOR TO TREE PLANTING A REPRESENTATIVE SAMPLE OF THE TREE PITS NEED TO BE EXCAVATED AND COMPLETELY FILLED WITH WATER. THE PERCOLATION RATES NEED TO BE RECORDED AND ADJUSTMENTS MADE TO THE DRAINAGE DETAIL AS APPROPRIATE. IT IS **ESSENTIAL** THAT THE LANDSCAPE CONSULTANT S ARE CONSULTED AT THIS STAGE AND APPROVAL GIVEN TO PROCEED WITH PLANTING.
2. DRAWING TO BE READ IN CONJUNCTION WITH THE CLAUSES AND STANDARDS AS SET OUT IN THE ASSOCIATED NATIONAL BUILDING SPECIFICATION WITH PARTICULAR REFERENCE TO THE FOLLOWING CLAUSES:
   - Q28: TOPSOILING
   - Q30: SEEDING AND TURFING
   - Q31: EXTERNAL PLANTING
   - Q35: LANDSCAPE MAINTENANCE

ARBORSYSTEM® URBAN TREE PLANTING SYSTEM

1. ROOTSPACE®AIRFORM 600 SERIES SOIL CELL SYSTEM (600mm DEPTH)
2. ROOTSTOP™600 ROOT & MOISTURE BARRIER (600mm DEPTH)
3. REROOT™300 RIBBED ROOT BARRIER (300mm DEPTH)
4. TREE/ROOTBALL
5. COMBIGRID GEOCOMPOSITE FABRIC/GRID
6. PLANTING SOIL
7. SOFT FINISH
8. TOPSOIL
9. COMPACTED BACKFILL MATERIAL
10. AGGREGATE SUB-BASE
11. COMPACTED NATIVE SUB BASE
12. MULCH
13. 80mm PERFORATED LAND DRAIN
14. ROOTSPACE AIRFORM
15. GREENTECH MONA WATERING SYSTEM
16. ROOTSPACE AIRFORM
17. ARBORGUY DEADMAN ANCHOR

TREE PIT IN SOFT

00. Tree: Refer to softworks drawing PL1539.1.M101.
01. 75mm depth top layer of bark mulch.
02. Topsoil: 300mm to BS3882:2007.
03. Subsoil: 600mm to BS8601:2013.
04. Single inlet irrigation/aeration system.
05. Triple Stake guying system. Treated softwood stakes driven firmly into base of tree pit by min. 300mm.
06. Planting: Refer to softworks drawing PL1489.2.M104.
07. Crushed Granite aggregate to improve drainage. 14mm Gauge. NO FINES. Laid on a camber.

NOTES:

1. Prior to tree planting a representative sample of the tree pits need to be excavated and completely filled with water. The percolation rates need to be recorded and adjustments made to the drainage detail as appropriate. It is ESSENTIAL that the Landscape Consultants are consulted at this stage and approval given to proceed with planting.

2. Drawing to be read in conjunction with the clauses and standards as set out in the associated National Building Specification with particular reference to the following clauses:

Q28: Topsoiling
Q30: Seeding and turfing
Q31: External planting
Q35: Landscape maintenance

TREE PIT IN HARD

00. Tree: Refer to softworks drawing PL1539.1.M101.
01. Arborvent 150 double inlet. 100mm perforated plastic pipe laid above Tier 1. Connected across width of tree pit to achieve deep root aeration.
02. Waterproof geotextile membrane layer.
03. Egg crate system - 'RootCell' by GreenBlue Urban.
04. Arborslot block infill tray tree surround; DPA/180-180/51/B/85/G2/DG100.
05. Perforated plastic pipe connected to positive drainage system. Subject to on site percolation test & confirmation of active drainage connection viability by engineers. Tree pit detail to be modified as required to ensure root ball does not sit in standing water.
06. Self compacting gravel infil
07. Dead man anchors
08. 150mm Pea shingle layer to improve drainage. NO FINES.
09. Outfall pipe to engineer's specifications.

NOTES:

1. Prior to tree planting a representative sample of the tree pits need to be excavated and completely filled with water. The percolation rates need to be recorded and adjustments made to the drainage detail as appropriate. It is ESSENTIAL that the Landscape Consultants are consulted at this stage and approval given to proceed with planting.

2. Drawing to be read in conjunction with the clauses and standards as set out in the associated National Building Specification with particular reference to the following clauses:

Q28: Topsoiling
Q30: Seeding and turfing
Q31: External planting
Q35: Landscape maintenance

		AP
r1	Issued for coment - 23/02/2024	

NOTE:
1. Do not scale from this drawing.
2. All setting out, levels and dimensions to be agreed on site.
3. The dimensions of all materials must be checked on site before being laid out.

Client:
DAVOS
Property Developments Ltd.

Project:
Sovereign Phase 2
Huyton

Title:
Planting Details

AMENITYTREE
ENVIRONMENTAL PLANNING CONSULTANTS
Willow Cottage, School Lane, Burdwarsley, CH3 9NX. 01829 770 075

Status: For Comment	
First Issued: FEB 2024	Drawn: AP
Scale: N/A	Size: A1

Drawing No.:
AT.23.1288.103r1