LANDSCAPE MANAGEMENT PLAN

HB_HUYTON

SOVEREIGN

Prepared on behalf of

Davos

Ref. AT_1288.LSCP/Mmgt.PLAN.
Rev06_19.02.25.

AMENITYTREE
ENVIRONMENTAL PLANNING CONSULTANTS

Contents

- 01_INTRODUCTION & MANAGEMENT RESPONSIBILITIES……...03.
- 02_MANAGEMENT OBJECTIVES……..03.
- 03_MAINTENANCE VISITS……..03.
- 04_GENERAL……..03.
- 05_EXISTING RETAINED WOODLAND AND TREES TO BOUNDARIES……..04.

  OBJECTIVES…….. 04.
  MAINTENANCE OPERATIONS……...04.

- 06_PROPOSED TREES ……...……05.

  OBJECTIVES……...05.
  MAINTENANCE OPERATIONS……...05.

- 07_ORNAMENTAL PLANTING……...…….05.

  OBJECTIVES……...05.
  MAINTENANCE OPERATIONS……...05.

- 08_WILDFLOWER AREAS……...06.

  OBJECTIVES……...06.
  MAINTENANCE OPERATIONS……...06.

- 09_NEW HEDGES……..……06.

  OBJECTIVES……...06.
  MAINTENANCE OPERATIONS……...06.

Maintenance Operations

- 10_PLANT REPLACEMENT……..07.
- 11_APPENDIX 1 ANNUAL MAINTENANCE OPERATIONS MATRIX……..08.
- 12_APPENDIX 2 PLANTING PLAN…….09.

1.0 INTRODUCTION AND MANAGEMENT REPSONSIBILITIES

1.1 This Landscape Management Plan has been prepared by Amenity Tree Environmental & Landscape Consultants.

1.2 The purpose of this document is to set out the overall management objectives for the proposed landscape areas and retained vegetation, and to describe the long term maintenance required to allow the planting to flourish and reach its design potential.

1.3 All references to planting treatments are based on the following drawings:

- AT.25.1288.101.r16 – Planting Plan.
- AT.25.1288.102.r14 – Planting Notes & Schedule.
- AT.25.1288.103.r1 – Planting Details.

1.4 Monitoring & Review - This document shall not be amended without the written approval of the client (Skyscape Property Management) who have responsibility for its implementation.

2.0 MANAGEMENT OBJECTIVES

2.1 The site shall be managed as a high quality industrial complex.

2.2 The proposed planting shall enhance the biodiversity and nature conservation interest.

2.3 The Client shall ensure establishment and the long-term health of all landscape elements to the benefit of staff and visitors as well as the visual amenity of the area. of the area.

2.4 Best Health & Safety practices shall be used at all times.

2.5 In order to maintain standards and make amendments where required, it is expected that the Client will review the management work with reference to this document at least quarterly with the maintenance team for the first year and annually thereafter.

3.0 MAINTENANCE VISITS

3.1 There shall be a minimum of 20 maintenance visits per year. Visits shall be bi monthly March to October inclusive and monthly November to February. Additional visits maybe maybe needed to deal with extreme weather conditions or specific horticultural requirements.

4.0 GENERAL

4.1 All materials and workmanship are to be the highest possible standards and shall be In accordance with relevant British Standards, good horticultural practices and Landscape specifications.

4.2 The Client shall employ suitably qualified staff for all work and when using sprays and mechanical equipment. All equipment shall be kept in a sound condition, fit for use and purpose. With staff appropriately trained and equipped.

4.3 The Client and their appointed contractors shall comply with all relevant Health & Safety regulations and good working practices.

4.5 All work shall be carried out whilst soil and weather conditions are suitable for the proposed operations.

4.6 Weeds, pruning's, leaves, rubbish and other arisings shall be removed from the site composting where possible at the end of each visit. No materials shall be left on site and the area shall be let in a neat and tidy condition after each visit.

4.7 Under no circumstances shall arisings, wood, rubbish etc be burnt on site or disposed of through refuse bins provided for occupants.

4.8 Entomogical or disease infestation shall be dealt with as required and shall be checked at each visit. Control shall either be by spraying with approved chemicals, pruning all dead wood by cutting back to an outward pointing bud or by the removal of defective plants.

4.9 Watering during the first two years after planting maybe necessary during times of drought in summer months and, when watering is required, it shall be carried out on a regular basis to suit climatic conditions. If conditions are severe or soils are particularly free draining, careful monitoring and more frequent watering maybe necessary to maintain good plant health and avoid plant failure.

4.10 All shrubs / hedges shall be pruned to remove deadwood, overhanging / tangles and damaged branches. Winter flowering shrubs shall be pruned in the spring. Shrubs flowering in March to July shall be pruned immediately after flowering and shrubs flowering in July to October shall be cut back to old wood in the winter. Shrubs that require spring pruning to provide seasonal colour shall be pruned in March and shrubs that require seasonal pruning to promote continual flowering shall be pruned appropriately.

4.11 Plants shall be re firmed when necessary to ensure the plants are securely planted and upright.

4.12 Bark mulch levels shall be maintained, being topped up when necessary to a minimum depth of 75mm. Any spillages shall be swept back onto the bed from surrounding areas, ensuring no plants are smothered. Border Bark Chippings by CPA-Horticulture or similar approved. Bark to applied to all ornamental planting / hedges / Native Edge Mixes and a 1m diameter area to all tree planting.

4.13 Edge valleys in beds shall be maintained to reduce spillage and grass edges shall be cut at each maintenance visit.

5.0 EXISTING RETAINED WOODLAND AND TREES TO BOUNDARIES.

Objectives:

- To maintain and enhance habitats of existing wildlife populations. Further detail are provided within the Woodland Management Plan.

Maintenance Operations:

5.1 Where immediate tree surgery is required, the potential for bats to be present must be assessed by a suitably qualified bat person prior to any works being carried out

5.2 Canopy ivy should be selectively thinned out to permit light to reach ground level. Areas Of thinning should take in rotation.

5.3 All coppicing / thinning / pruning works are to be undertaken outside of the bird nesting Season from February / March to August / September inclusive.

6.0 PROPOSED TREES.

Objectives:

- To ensure early establishment and healthy growth.
- To create a well shaped framework for future balanced growth.
- To enhance appearance and visual interest.

Maintenance Operations:

6.1 In the first two years following planting, new trees are to be Closely monitored at each maintenance visit to ensure that they are upright, firm stable and in good health.

6.2 Checks shall be made to ensure all stakes and ties of planted trees are properly adjusted at each maintenance visit. Between 3-4 years tree stakes shall be removed once the trees are established and root firm.

6.3 Trees shall be maintained and watered to field capacity throughout the first and second years of planting, taking into account prevailing weather conditions and hot dry periods. they should be watered with the use of a hose being left to run slowly down the irrigation tube until the pit reaches full capacity.

6.4 Any damaged or dying branches shall be removed using the standard methods appropriate for the work. Any dead, dying or defective trees shall be replaced in the following dormant planting season, refer to Section 10 Plant Replacement.

6.5 Trees planted in grass areas shall have a 100cm diameter circle around the trunk which should be maintained free of weeds and be mulched until the tree is no longer vulnerable to damage from mowing equipment.

6.6 All trees on site, in publicly accessible areas should be inspected by an Arboricultural Consultant every 2 years and any risks addressed immediately. Or after extreme weather conditions.

7.0 ORNAMENTAL PLANTING

Objectives:

- To ensure early establishment and healthy growth.
- To maintain a dense canopy cover.
- To maintain year round appearance and visual interest.

Maintenance operations:

7.1 All shrub beds shall be maintained substantially free of weeds. Work shall be done either manually or with appropriate selective weed killer in accordance with the manufacturers recommendations. If weed killer is used the dead weeds shall be removed at the next maintenance visit. Care must be taken to avoid damage to adjacent planting and grass and replaced immediately if affected by weed killer.

7.2 Once established shrubs shall be selectively thinned or reduced in height as appropriate by removal or pruning to allow room for growth and avoid overcrowding / overshading and create a natural form rather than a cube or cloud shape. Care shall be taken to avoid over pruning and so creating obvious gaps in the shrub beds.

7.3 Ground cover plants shall be clipped or pruned if necessary to give a neat and tidy finish and contained within the shrub bed. Work to remove dead vegetation shall be carried out during the winter months.

7.4 For most herbaceous species a single cut can be carried out in early spring after the risk of frost has passed (generally March onwards). Leaving dried flowers over winter periods visual interest and provides a food source for seed eating birds and insects. Shelter is also found for wildlife in dead foliage over winter.

7.5 Fertilising:

- One application, just before or at the time of spring growth.
- A balanced fertiliser is required, one high in Phosphorous. Fertilisers high in nitrogen should not be used. NPK 10-20-10 balance would be suitable.

7.6 Litter Collection:

> Collect litter and dispose off site on each visit.

8.0 WILDFLOWER GRASS AREAS

Objectives:

- To create an attractive grass sward with height and colour.
- To provide habitats for reptiles, insects, bees and butterflies

Maintenance Operations:

8.1 Refer to planting plans for guidance on the proposed areas of wildflower seed mix.
8.2 Cutting to be carried out using appropriate large wheeled, rotary mower to avoid injuries to reptiles unless otherwise specified.
8.3 Remove any litter, debris, stones and earth clods larger than 25mm in any dimension prior to mowing.
8.4 Sward heights to be kept to a minimum 15cm with one cut per year in September after the first year. 1m from foot paths edges adjacent to wildflower areas should be maintained at a height of no more than 15cm through out the year.
8.5 No fertiliser or nutrients are to be added:
8.6 Top dress if required with additional appropriate native seed origin seed if slow to establish.
8.7 Year 1:

- First cut 5cm March / April (Spring seeding first cut in May).
- Cut every 2 months or when sward reaches 15cm.
- Final cut September / October.
- Allow cut grass to dry and disperse seed before removing arisings.
- The requirements in the first year are to control weeds and reduce competition from grasses. Cut sward to a height of 5cm every 2 months or when the sward reaches 15cm. Remove all cut material to avoid smothering the sward. Where persistent weeds exist, spot treat with Glyphosate or dig out.

8.8 Future Years:

- One cut in September to 15cm.
- Remove all cuttings.
- Allow cut grass to dry and disperse seed before removing arisings.
- The requirements in future years is to maintain a species diverse sward of value to wildlife.

8.9 The site may require further cuts in the autumn period to remove untidy growth in an extended growing season.

9.0 NEW HEDGEROWS

Objectives:

- To ensure early establishment and healthy development.
- To create well established hedgerows with connectivity to other important bio diversity elements.

- To enhance biodiversity.
- To enhance appearance and visual interest.

Maintenance Operations:

9.1 In the first two years of planting, new hedgerow plants are to be monitored at each maintenance visit to ensure they are upright, firm and stable and in good health.

9.2 Checks shall be made to ensure all stakes / grow tubes of hedgerow plants (if applicable are firmed up in an upright position and rubbing against plant. Removal of grow tubes is dependent on plant development but generally occurs years 3-5.

9.3 Hedgerows should be maintained and watered to field capacity throughout the first and second years of planting. They should be watered by hose or irrigation drip lines. Careful monitoring during watering shall be necessary to minimise risk of failures, leaks or damage to property.

9.4 Any damaged or dying plants are to be replaced in the following dormant season.

9.5 Hedgerows should be maintained in a grass free strip 75cm wide for the first 3 year or until established.

9.6 Hedgerows should be pruned to a height of 1250mm high by 750mm wide, pruning to take place Autumn and Spring, outside of the nesting season. Inspect prior to works.

10.0 PLANT REPLACEMENT

10.1 An annual inspection of trees and shrubs shall be undertaken in September of each subsequent year after planting to assess the condition of stock and prepare a list of necessary remedial work and replacement planting. The list shall be submitted to Client or the Management Companies, as appropriate immediately after the visit with accompanying costs. Replacement planting shall be implemented in accordance with the planning requirements for all plots. Client shall be responsible for the replacement planting for the first year after planting, but for the next four years the Management Companies or the Purchaser / Tenant shall be responsible for the replacement of Dead or dying plant material.

10.2 All work shall be carried out by appropriately qualified horticultural operatives with the correct insurances. All work shall be carried out in accordance with good horticultural practice and British Standards. All debris arising from the works shall be removed from site.

10.3 Any new replacement planting shall be tagged so the Local Authority, Client, the Management Company or the Purchasers / Tenant is aware that these plants will have a further years defects liability period. The contractor shall provide Client or the Management Companies with a list of replacements and their location after completion.

10.4 Replacement tree and shrub planting shall take place in the following November to February, dormant winter period during suitable weather conditions.

10.5 Approval of all remedial and replacement work shall be obtained before starting.

11 - APPENDIX 1 ANNUAL MAINTENANCE MATRIX

ANNUAL MAINTENANCE OPERATIONS MATRIX

	J	F	M	A	M	J	J	A	S	O	N	D
GENERAL OPERATIONS												
Weeding.			✓	✓	✓	✓	✓	✓	✓	✓		
Watering (If required).				✓	✓	✓	✓	✓	✓			
Litter removal.	✓	✓	✓	✓	✓	✓	✓	✓	✓	✓	✓	✓
Removal of fallen leaves.										✓	✓	
Re-firming plants (As required).			✓							✓		
Pest and disease control (As required).						✓						
Replacement planting.	✓											
WILDFLOWER AREAS												
Mowing.									✓			
Rake off arisings									✓			
Overseeding as required.			✓	✓					✓			
SHRUB AREAS												
Weeding.			✓	✓	✓	✓	✓	✓	✓	✓		
Pruning (Timing dependent on species).	✓					✓						
Top up mulch (After yr 1 & replanting).			✓									
Thin out planting (as required).										✓		
PROPOSED TREES												
Check condition and treat (As required).											✓	
Pruning for good habitat & Safety.											✓	
Check, adjust, repair tree stakes & ties.		✓	✓								✓	
Apply fertiliser and mulch to new trees.			✓									
Annual monitoring.									✓			
PROPOSED HEDGES												
Pruning for good habitat & Safety.		✓								✓		
Check, adjust, repair grow tubes.	✓	✓	✓	✓	✓	✓	✓	✓	✓	✓	✓	✓
Apply fertiliser and mulch to hedges.			✓						✓			
Annual monitoring.	✓											

Note : This table lists the key routine operations required during both the defects and long term maintenance periods together with an indciation of when they should be undertaken throughout the year. It should be noted that the table should only be used as a guide to times only. It does not include every operation required but all checking and intermittent maintenance actions should occur during routine visits. The contractor is responsible for the appearance and condition of the landscape areas and should be prepared to undertake specific maintenance tasks outside the above periods throughout the year to satisfy management or safety objectives.

12 - APPENDIX 2 PLANTING PLAN

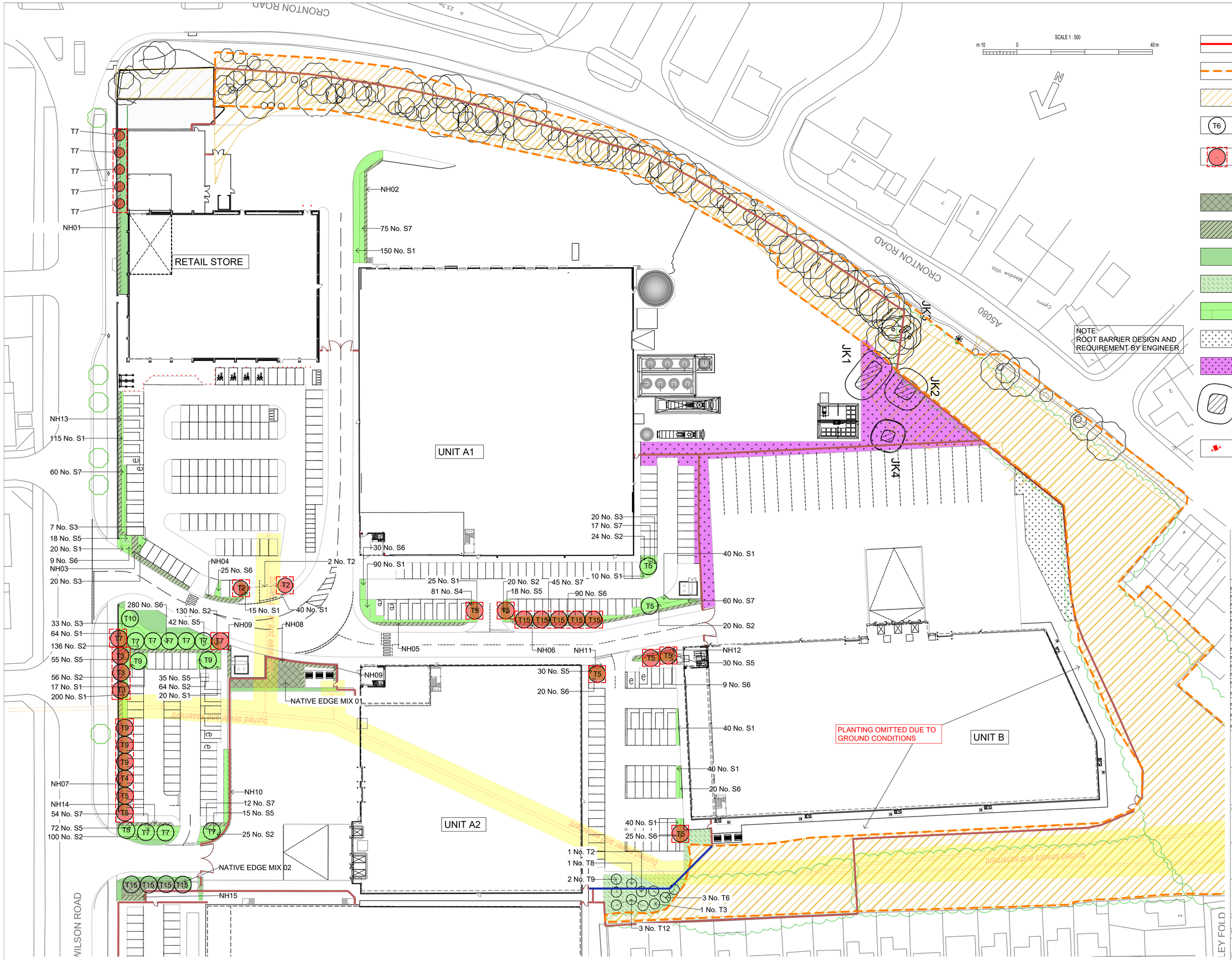

KEY

- SITE BOUNDARY
- TPO BOUNDARY (approximate)
- RETAINED WOODLAND
- PROPOSED NATIVE TREE PLANTING see schedule for details
- TREE WITH CELL ROOT SYSTEMS Trees to be planted in arbor urban tree planting system to provide 17m³ growing space.
- NATIVE EDGE MIX see schedule for details
- PROPOSED HEDGE PLANTING see schedule for details
- PROPOSED LAWN see schedule for details
- WILDFLOWER AREAS see schedule for details
- GROUND COVER/SHRUB PLANTING see schedule for details
- EXISTING SCRUB RETAINED
- PROPOSED NATIVE SCRUB
- JAPANESE KNOTWEED. REFER TO JAPANESE KNOTWEED SOLUTIONS DOCUMENTATION FOR DETAILS. NOTE: JK1,JK2 & JK3 TO BE 'REPLANTED' WITH NATIVE SCRUB MIX WHEN PERMITTED
- EV CHARGER

r16	Planting omitted to RHS parking area & re introduced adjacent Unit A1 Service Yard.	06/10/2026	AP
r15	Planting removed from retail unit car park.	16/09/2026	AP
r14	Updated to AJA 7182-041 Rev D	09/09/2026	AP
r13	Minor amendments	12/01/2026	AP
r12	Junction LSCP omitted until agreement with LPA	04/11/2025	AP
r11	Minor amendments / Junction Planting extracted	22/10/2025	AP
r10	Planting updated	11/08/2025	AP
r9	Updated to 7182-401 Rev P06. Japanese knotweed locations added.	01/08/2025	AP
r8	Planting updated	19/02/2025	AP
r7	Updated	10/12/2024	AP
r6	Updated to 13579-AEW-S1-XX-DR-A-1103 - 06/08/2024		AP
r5	Updated to 13579-AEW-XX-XX-DR-A-0503-P15 - 06/08/2024		AP
r4	Updated in response to LPA comments - 17/07/2024		AP
r3	Planting updated - 23/02/2024		AP
r2	Updated layout -4/10/2023		AP
r1	Issued for comment - 29/09/2023		AP

NOTE:
1. Do not scale from this drawing.
2. All setting out, levels and dimensions to be agreed on site.
3. The dimensions of all materials must be checked on site before being laid out.

Client: DAVOS Property Developments Ltd.

Project: Sovereign Phase 2 Huyton

Title: Planting Plan

AMENITYTREE
ENVIRONMENTAL PLANNING CONSULTANTS
Willow Cottage, School Lane, Burdwarsley, CH3 9NX. 01829 770 075

Status: For Comment

First Issued: SEP 2023 | Drawn: AP

Scale: 1:500 | Size: A1

Drawing No.: AT.23.1288.101r16

PLANTING SCHEDULE

PLANT SCHEDULE_r15.

REF.	TYPE	NO.	GIRTH cm	%	HEIGHT cm	TYPE	DENSITY	NOTE
1.0	**NATIVE TREE PLANTING**							
T1	Acer campestre.	0	16-18	NA	325-375	RB	NA	2 stakes / cross member / tie & Greentech Mona Irrigation System / 75lt Ltr Tree Irrigation bag.
T2	Betula pendula Fastigiata Joes.	3	16-18	NA	350-400	RB	NA	2 stakes / cross member / tie & Greentech Mona Irrigation System / 75lt Ltr Tree Irrigation bag.
T3	Carpinus betulus Trans Fontaine.	4	16-18	NA	325-375	RB	NA	2 stakes / cross member / tie & Greentech Mona Irrigation System / 75lt Ltr Tree Irrigation bag.
T4	Crataegus monogyna.	1	8-10.	NA	200-250	RB / FTH	NA	Single low stake / Greentech Mona Irrigation System / 75Ltr Tree Irrigation bag.
T5	Prunus sargentii Rancho.	11	16-18	NA	350-400	RB	NA	2 stakes / cross member / tie & Greentech Mona Irrigation System / 75lt Ltr Tree Irrigation bag.
T6	Quercus ilex.	3	12-14.	NA	250-300	RB	NA	2 stakes / cross member / tie & Greentech Mona Irrigation System / 75lt Ltr Tree Irrigation bag.
T7	Pyrus chanticleer.	15	16-18	NA	325-375	RB	NA	2 stakes / cross member / tie & Greentech Mona Irrigation System / 75lt Ltr Tree Irrigation bag.
T8	Quercus robur.	1	16-18	NA	325-375	RB	NA	2 stakes / cross member / tie & Greentech Mona Irrigation System / 75lt Ltr Tree Irrigation bag.
T9	Prunus avium.	5	8-10.	NA	200-250	RB / FTH	NA	Single low stake / Greentech Mona Irrigation System / 75Ltr Tree Irrigation bag.
T10	Acer x freemanii 'Jeffersred'.	1	20-25	NA	435-500	RB	NA	Underground guyed & Greentech Mona Irrigation System / 75Ltr Tree Irrigation bag.
T11	Fagus sylvatica.	0	8-10.	NA	200-250	RB / FTH	NA	Single low stake / Greentech Mona Irrigation System / 75Ltr Tree Irrigation bag.
T12	Ilex aquifolium.	2	8-10.	NA	200-250	RB / FTH	NA	Single low stake / Greentech Mona Irrigation System / 75Ltr Tree Irrigation bag.
T13	Tilia cordata Greenspire.	0	16-18	NA	325-375	RB	NA	2 stakes / cross member / tie & Greentech Mona Irrigation System / 75lt Ltr Tree Irrigation bag.
T14	Tilia cordata.	0	16-18	NA	325-375	RB	NA	2 stakes / cross member / tie & Greentech Mona Irrigation System / 75lt Ltr Tree Irrigation bag.
T15	Fagus sylvatica Dawyck.	9	16-18	NA	325-375	RB	NA	2 stakes / cross member / tie & Greentech Mona Irrigation System / 75lt Ltr Tree Irrigation bag.

2.0 NATIVE EDGE MIX

	NEM_01 NO.	NEM_02 NO.	GIRTH	HEIGHT	%	TYPE	DENSITY	NOTE
Amelanchier lamarckii.	13	6	7	NA	50cm	5	BR	1 / m2. 75cm biodegradable grow tube / stake.
Cornus sanguinea.	23	11	12	NA	50cm	10	BR	1 / m2. 75cm biodegradable grow tube / stake.
Euonymous europaeus.	23	11	12	NA	50cm	10	BR	1 / m2. 75cm biodegradable grow tube / stake.
Ligustrum vulgare.	13	6	7	NA	50cm	5	BR	1 / m2. 75cm biodegradable grow tube / stake.
Rosa canina.	23	11	12	NA	25cm	10	BR	1 / m2. 50cm biodegradable grow tube / stake.
Rosa pimpinellifolia.	13	6	7	NA	25cm	5	BR	1 / m2. 50cm biodegradable grow tube / stake.
Quercus robur.	23	11	12	NA	50cm	10	BR	1 / m2. 75cm biodegradable grow tube / stake.
Tilia cordata.	13	6	7	NA	50cm	5	BR	1 / m2. 75cm biodegradable grow tube / stake.
Sorbus aucuparia.	23	11	12	NA	50cm	10	BR	1 / m2. 75cm biodegradable grow tube / stake.
Taxus baccata.	13	6	7	NA	75cm	5	BR	1 / m2. 100cm biodegradable grow tube / stake.
Virburnum latana.	23	11	12	NA	50cm	10	BR	1 / m2. 75cm biodegradable grow tube / stake.
Viburnum opulus.	23	11	12	NA	50cm	10	BR	1 / m2. 75cm biodegradable grow tube / stake.
Ulex europaeus.	13	6	7	NA	50cm	5	BR	1 / m2. 75cm biodegradable grow tube / stake.

Planting Notes:
a) Density - The above to be planted at a rate of 1no. Plants per m2, in groups of between 3 and 7.
b) Grow Tubes - All to be planted in biodegradable black growing tubes, 25cm taller than planting height with support.
c) Fertiliser - Organic Scotts N-Mag Lite by Greenwich. To be applied at manufacturers recommended rates.
d) Slow Release fertilser - Agroblend Tablets or simialr approved. To be applied at manufacturers recommended rates.
e) Amelirorant - Peat Free Compost, 7ltrs per plant, Rootgrow Professional or similar approved. To be applied at manufacturers recommended rates.
f) Mycorrhizal Fungi - As supplied by Plant Works UK or similar approved. To be applied at manufacturers recoomened rates.

3.0 NATIVE HEDGE PLANTING	TOTAL	NH_01	NH_02	NH_03	NH_04	NH_05	NH_06	NH_07	NH_08	NH_09	NH_10	NH_11	NH_12	NH_13	NH_14	NH_15	GIRTH	HEIGHT cm	%	TYPE	DENSITY	NOTE
Acer campestre.	241	24	20	13	7	13	30	40	12	15	12	3	6	23	8	15	NA	60-80	10	BR	NA	1+2 Transplant / 3 breaks / 100cm biodegradable grow tube / stake.
Carpinus betulus.	120	12	10	7	4	7	15	20	6	7	6	1	3	11	4	7	NA	60-80	5	BR	NA	1+2 Transplant / 3 breaks / 100cm biodegradable grow tube / stake.
Corylus avellana.	231	24	10	13	7	13	30	40	12	15	12	3	6	23	8	15	NA	60-80	10	BR	NA	1+2 Transplant / 3 breaks / 100cm biodegradable grow tube / stake.
Crataegus monogyna.	1452	144	120	75	45	81	180	240	75	90	75	15	39	135	48	90	NA	60-80	60	BR	NA	1+2 Transplant / 3 breaks / 100cm biodegradable grow tube / stake.
Ilex aquifolium.	363	36	30	20	13	20	45	60	18	22	18	4	9	34	12	22	NA	30-45	15	BR	NA	50cm biodegradable grow tube / stake.

Planting Notes:
a) To be planted in a double staggered row @ 5 plants per Lm.
b) Grow Tubes - All to be planted in biodegradable black growing tubes, 25cm taller than planting height with support.
c) Fertiliser - Organic Scotts N-Mag Lite by Greenwich. To be applied at manufacturers recommended rates.
d) Slow Release fertiliser - Agroblend Tablets or simialr approved. To be applied at manufacturers recommended rates.
e) Amelirorant - Peat Free Compost, 7ltrs per plant, Rootgrow Professional or similar approved. To be applied at manufacturers recommended rates.
f) Mycorrhizal Fungi - As supplied by Plant Works UK or similar approved. To be applied at manufacturers recoomened rates.

4.0 SHRUBS & GROUNDCOVER PLANTS	NO.	GIRTH	HEIGHT cm	%	TYPE	DENSITY	NOTE
S1 Prunus laurocerasus Zabeliana.	812	NA	20-30	NA	3L	4 / m2	
S2 Pittosporum tenufolium Tom Thumb.	578	NA	20-30	NA	3L	4 / m2	
S3 Lavandula angustifolia 'Rosea'.	80	NA	45-60	NA	3L	4 / m2	
S4 Escallonia SlieveDonard.	21	NA	30-45	NA	3L	3 / m2	
S5 Pennesitum vollosum.	330	NA	30-45	NA	3L	3 / m2	
S6 Stipa tenuissima.	544	NA	30-45	NA	3L	3 / m2	
S7 Cornus alba Elegantissima.	285	NA	30-45	NA	3L	3 / m2	

5.0 WILDFLOWER AREAS

5.1 To be seeded with Emorsgate EM4. - Meadow mixture for clay soils @ 40kg per ha.

6.0 PROPOSED NATIVE SCRUB

Betula nana.	180	NA	10	100	BR	2/m2	Rabbit spiral protection.	300
Carpinus betulus.	270	NA	15	150-175	BR	2/m2	Feathered / Single low stake / rabbit spiral protection.	450
Cornus sanguinea.	90	NA	5	100	BR	2/m2	Rabbit spiral protection.	150
Corylus avellana.	630	NA	35	100	BR	2/m2	Rabbit spiral protection.	1050
Pinus sylvestris.	180	NA	10	100	RB	2/m2	Rabbit spiral protection.	300
Prunus avium.	270	NA	15	100	BR	2/m2	Rabbit spiral protection.	450
Crataegus monogyna.	90	NA	5	100	BR	2/m2	Rabbit spiral protection.	150
Prunus spinosa.	90	NA	5	100	BR	2/m2	Rabbit spiral protection.	150

Areas to be:
1) 80% planting.
2) 2 Plants per m2.
3) 20% Open space.
4) Open spaces to be seeded with Emorsgate Seeds EG10 Tussock Grass Mixture.

7.0 BARK MULCH

7.1 Install 75mm layer of chipped bark mulch to :
a) Native edge mix areas.
b) Native hedgerows.
c) Proposed native scrub areas.
d) Ornamental shrub areas.

PLANTING NOTES

1. Plant handling at the nursery and transit up to delivery, shall be in accordance with 'Plant Handling' the booklet is published by the Committee for Plant Supply and Establishment (CPSE). The contractor shall comply with clauses 3 & 4 of the above booklet (obtained from The Horticultural Trades Association which refers to the receipt, uploading and temporary storage of plants.
2. Plants shall be first class examples of their species or variety, free from all pests and diseases with good fibrous root systems and materially undamaged. Refer to relevant sections of BS.3936.Pts 1- 4, Specification of Nursery Stock.
3. All planting is to in general compliance with BS.4428:1989 Code of Practice for General Landscape Operations.
4. All trees are to be underground guyed. All tree pits to be 100x100x75cm deep. Back fill, 65cm 70% by volume approved topsoil, 30% by volume tree compost (no peat products), 10cm coarse sand to base of pit. Base of pit to be broken up prior to backfilling and tested for drainage properties.
5. The contractor must ascertain for themselves the exact location of any underground services prior to excavations. Root barriers (to engineers details) shall be installed adjacent to any underground services and between tree and adjacent buildings or structures if the tree is within 10m.
6. Water as necessary prior to and post PC to end of maintenance period to ensure the establishment and continued healthy development.
7. Carry out all work when soil and weather conditions are suitable. Do not plant during periods of frost or strong winds. Plant only during the following periods_Bare root material : Late October to Late March, Container / Air pot material : Anytime ground and weather conditions permit. Ensure adequate watering and weed control is available.
8. Any tree or shrub that dies, appears unhealthy or poorly developed shall be replaced at the end of the 12 months maintenance and defects period during the next appropriate planting season.

TOPSOILING

1. All topsoil delivered shall be in accordance with BS.3882.2007, certified as such. Sample load to be delivered to site for CA approval.
2. Turfed lawn areas to receive 150mm depth of approved topsoil (after light consolidation).
3. Shrub areas to receive 400mm depth of approved topsoil (after light consolidation).
4. Hedgerows to receive 450mm depth of approved topsoil (after light consolidation).
5. Wild flower areas are not top soiled. Any level make up to achieve via subsoil to BS.8601.2013.

TURFING

1. Turf to be laid over a minimum 150mm lightly consolidated approved topsoil. No turf shall be laid in frosty or exceptionally dry weather. The well being of the turf is the contractors responsibility prior to PC and for the duration of the maintenance period. Any failures shall be replaced at the contractors expense.
2. Prior to the installation of the topsoil subsoil shall be rotavated. Lightly cultivate the topsoil, harrow and rake topsoil into a fine tilth suitable for final grading prior to turfing.Rake to a true, even consolidated surface.
3. Turf shall be grown by a member of the Turfgrass Growers Association (TGA). Certification of its provence shall be supplie to the CA.
4. Turf shall be laid within 36 hours of delivery and immediately watered after laying. Bumps, ridges and depressions will not be accepted.

WILDFLOWER AREAS

1. No topsoil is required within wildflower seeding areas. Seed should be sown into good quality, clay free subsoil. Cutivate to 150mm depth and all weeds, stones and deleterious material larger than 35mm in any direction shall be removed. Cultivated seed bed shall be rolled and raked to produce a tilth 25mm deep. Allow germination of existing seed bank. After 2-3 weeks spray regrowth with an approved selective herbicide. Allow to die back and rake off. Lightly water and seed late August or September or April - May. All seeding to be sown at the suppliers recommended rate.
2. First cut shall be August to September and lightly the following spring using a flail mower or strimmer. All cuttings to be raked up and disposed of off site.
3. Subsequent cuts upon completion of flowering in October with flail or strimmer with arisings removed.

r14	Planting schedule updated 06/10/2026	AP
r13	Planting removed from retail unit car park. 16/09/2026	AP
r12	Updated to AJA 7182-041 Rev D 09/09/2026	AP
r11	Planting schedule updated 12/01/2026	AP
r10	Planting schedule updated 12/08/2025	AP
r9	Planting schedule updated 11/08/2025	AP
r8	Planting schedule updated 19/02/2025	AP
r7	Planting schedule updated 10/12/2024	AP
r6	Planting schedule updated 14/11/2024	AP
r5	Planting schedule updated 16/08/2024	AP
r4	Planting schedule updated 17/07/2024	AP
r3	Planting schedule updated 23/02/2024	AP
r2	Updated to revised layout 4/10/2023	AP
r1	Issued for comment - 29/09/2023	AP

NOTE:
1. Do not scale from this drawing.
2. All setting out, levels and dimensions to be agreed on site.
3. The dimensions of all materials must be checked on site before being laid out.

Client:
DAVOS
Property Developments Ltd.

Project:
Sovereign Phase 2
Huyton

Title:
Planting Notes & Schedule

AMENITYTREE
ENVIRONMENTAL PLANNING CONSULTANTS
Willow Cottage, School Lane, Burdwarsley, CH3 9NX. 01829 770 075

Status: For Comment
First Issued: SEP 2023 | Drawn: AP
Scale: N/A | Size: A1
Drawing No.: AT.23.1288.102r14

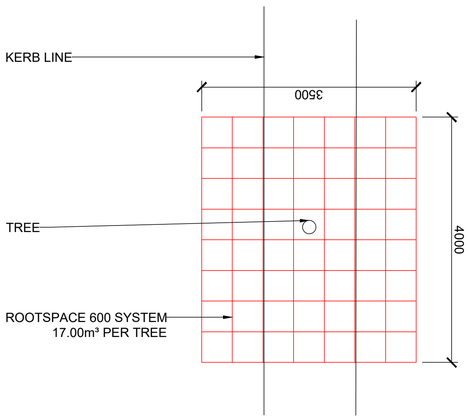

DETAIL 1 PLAN 1:50

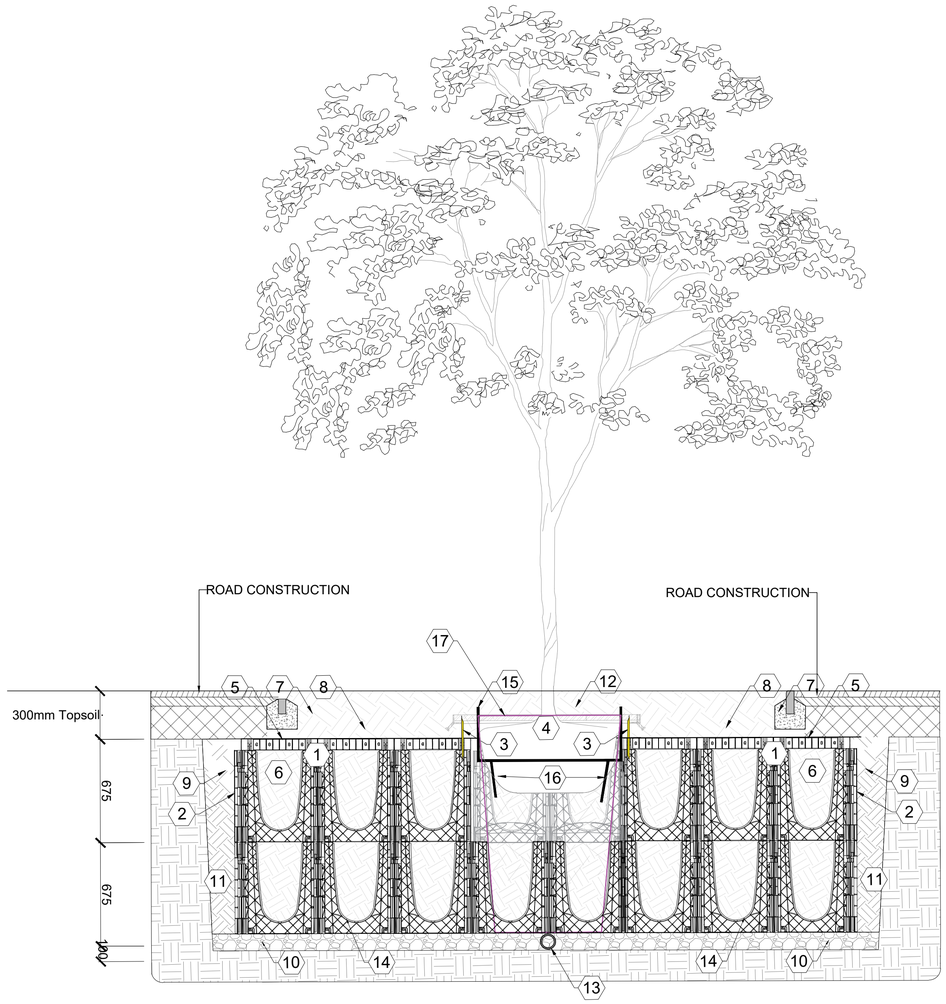

NOTE: PIT DETAIL SUBJECT TO ON SITE PERCOLATION TEST AND CONFIRMATION OF ACTIVE DRAINAGE CONNECTION.
TREE PIT DETAIL TO BE MODIFIED AS REQUIRED TO ENSURE ROOTBALL DOES NOT SIT IN WATER.

17.0m³ OF VOLUME PROVIDED

NOTES

1. PRIOR TO TREE PLANTING A REPRESENTATIVE SAMPLE OF THE TREE PITS NEED TO BE EXCAVATED AND COMPLETELY FILLED WITH WATER. THE PERCOLATION RATES NEED TO BE RECORDED AND ADJUSTMENTS MADE TO THE DRAINAGE DETAIL AS APPROPRIATE. IT IS **ESSENTIAL** THAT THE LANDSCAPE CONSULTANT S ARE CONSULTED AT THIS STAGE AND APPROVAL GIVEN TO PROCEED WITH PLANTING.
2. DRAWING TO BE READ IN CONJUNCTION WITH THE CLAUSES AND STANDARDS AS SET OUT IN THE ASSOCIATED NATIONAL BUILDING SPECIFICATION WITH PARTICULAR REFERENCE TO THE FOLLOWING CLAUSES:
   - Q28: TOPSOILING
   - Q30: SEEDING AND TURFING
   - Q31: EXTERNAL PLANTING
   - Q35: LANDSCAPE MAINTENANCE

ARBORSYSTEM® URBAN TREE PLANTING SYSTEM

1. ROOTSPACE®AIRFORM 600 SERIES SOIL CELL SYSTEM (600mm DEPTH)
2. ROOTSTOP™600 ROOT & MOISTURE BARRIER (600mm DEPTH)
3. REROOT™300 RIBBED ROOT BARRIER (300mm DEPTH)
4. TREE/ROOTBALL
5. COMBIGRID GEOCOMPOSITE FABRIC/GRID
6. PLANTING SOIL
7. SOFT FINISH
8. TOPSOIL
9. COMPACTED BACKFILL MATERIAL
10. AGGREGATE SUB-BASE
11. COMPACTED NATIVE SUB BASE
12. MULCH
13. 80mm PERFORATED LAND DRAIN
14. ROOTSPACE AIRFORM
15. GREENTECH MONA WATERING SYSTEM
16. ROOTSPACE AIRFORM
17. ARBORGUY DEADMAN ANCHOR

TREE PIT IN SOFT

00. Tree: Refer to softworks drawing PL1539.1.M101.
01. 75mm depth top layer of bark mulch.
02. Topsoil: 300mm to BS3882:2007.
03. Subsoil: 600mm to BS8601:2013.
04. Single inlet irrigation/aeration system.
05. Triple Stake guying system. Treated softwood stakes driven firmly into base of tree pit by min. 300mm.
06. Planting: Refer to softworks drawing PL1489.2.M104.
07. Crushed Granite aggregate to improve drainage. 14mm Gauge. NO FINES. Laid on a camber.

NOTES:

1. Prior to tree planting a representative sample of the tree pits need to be excavated and completely filled with water. The percolation rates need to be recorded and adjustments made to the drainage detail as appropriate. It is ESSENTIAL that the Landscape Consultants are consulted at this stage and approval given to proceed with planting.

2. Drawing to be read in conjunction with the clauses and standards as set out in the associated National Building Specification with particular reference to the following clauses:

Q28: Topsoiling
Q30: Seeding and turfing
Q31: External planting
Q35: Landscape maintenance

TREE PIT IN HARD

00. Tree: Refer to softworks drawing PL1539.1.M101.
01. Arborvent 150 double inlet. 100mm perforated plastic pipe laid above Tier 1. Connected across width of tree pit to achieve deep root aeration.
02. Waterproof geotextile membrane layer.
03. Egg crate system - 'RootCell' by GreenBlue Urban.
04. Arborslot block infill tray tree surround; DPA/180-180/51/B/85/G2/DG100.
05. Perforated plastic pipe connected to positive drainage system. Subject to on site percolation test & confirmation of active drainage connection viability by engineers. Tree pit detail to be modified as required to ensure root ball does not sit in standing water.
06. Self compacting gravel infil
07. Dead man anchors
08. 150mm Pea shingle layer to improve drainage. NO FINES.
09. Outfall pipe to engineer's specifications.

NOTES:

1. Prior to tree planting a representative sample of the tree pits need to be excavated and completely filled with water. The percolation rates need to be recorded and adjustments made to the drainage detail as appropriate. It is ESSENTIAL that the Landscape Consultants are consulted at this stage and approval given to proceed with planting.

2. Drawing to be read in conjunction with the clauses and standards as set out in the associated National Building Specification with particular reference to the following clauses:

Q28: Topsoiling
Q30: Seeding and turfing
Q31: External planting
Q35: Landscape maintenance

		AP
r1	Issued for coment - 23/02/2024	

NOTE:
1. Do not scale from this drawing.
2. All setting out, levels and dimensions to be agreed on site.
3. The dimensions of all materials must be checked on site before being laid out.

Client:
DAVOS
Property Developments Ltd.

Project:
Sovereign Phase 2
Huyton

Title:
Planting Details

AMENITYTREE
ENVIRONMENTAL PLANNING CONSULTANTS
Willow Cottage, School Lane, Burdwarsley, CH3 9NX. 01829 770 075

Status: For Comment	
First Issued: FEB 2024	Drawn: AP
Scale: N/A	Size: A1

Drawing No.:
AT.23.1288.103r1