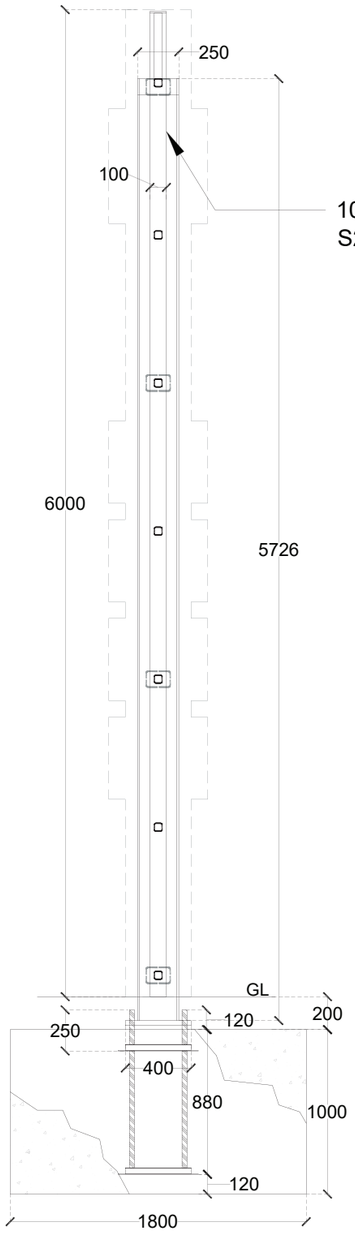

SIDE ELEVATION
SCALE 1:40

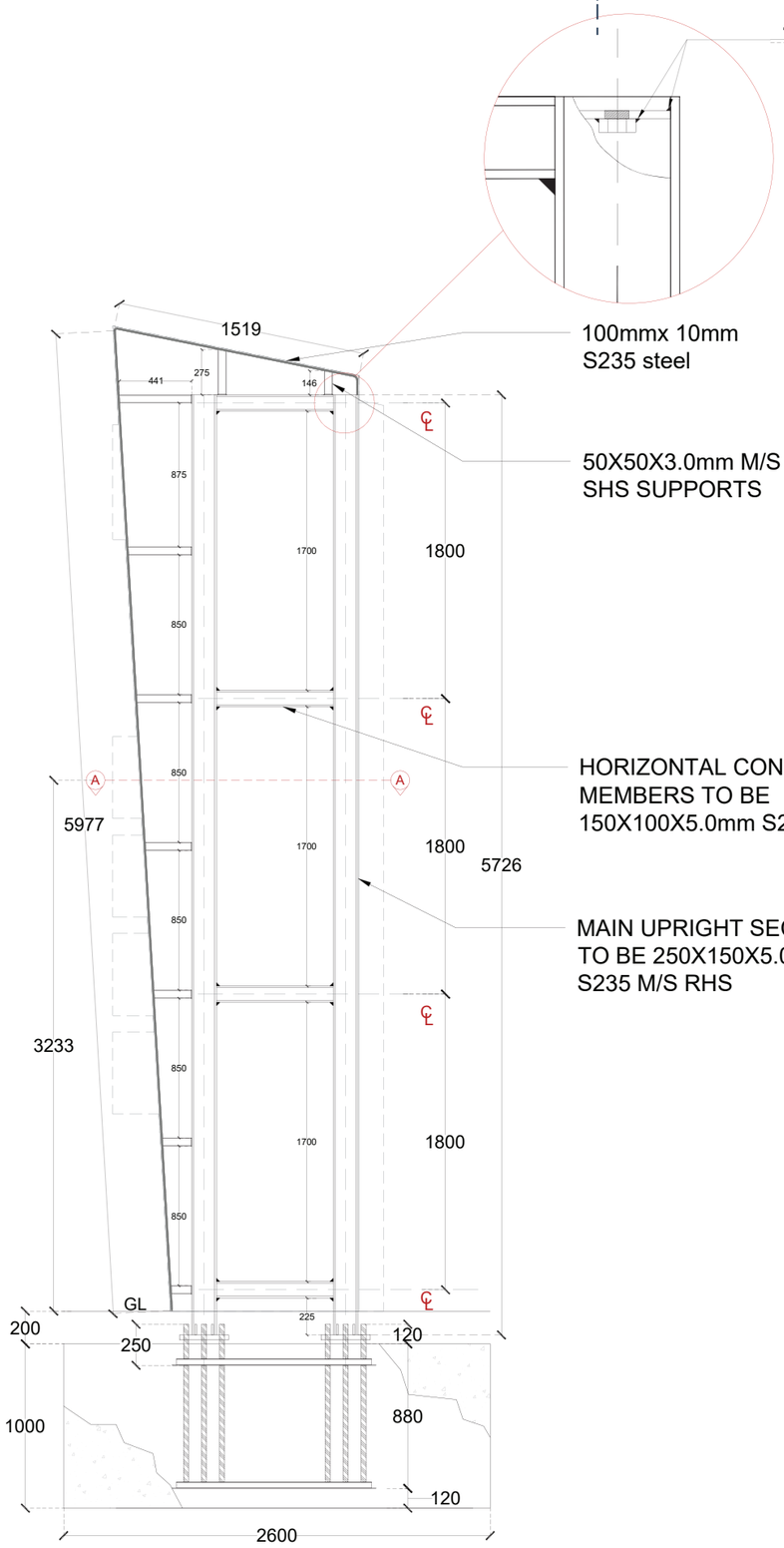

FRONT ELEVATION
SCALE 1:40

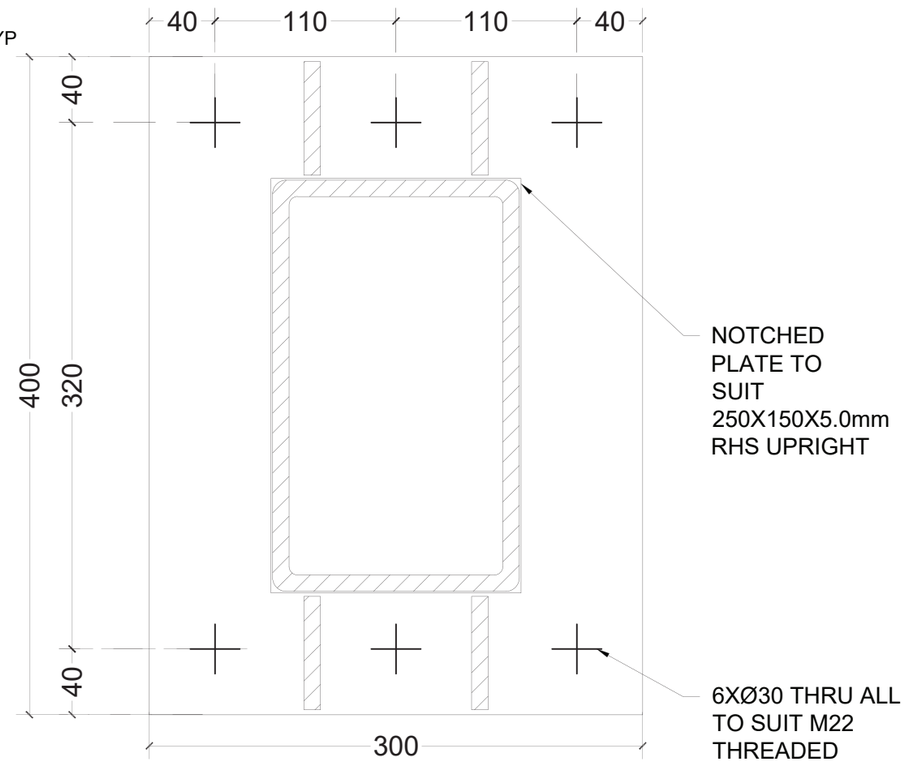

BASEPLATE DETAIL
SCALE 1:4

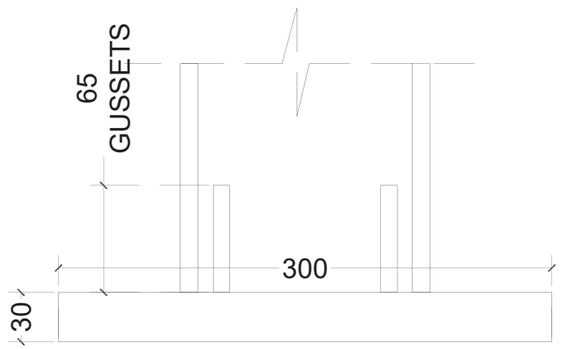

BASEPLATE DETAIL
SCALE 1:4

CLIENT	PROJECT
THE GYM GROUP	THE GYM GROUP-TOTEM SIGN

DESCRIPTION: TOTEM SIGN - DETAIL DRAWING

NAME	SIGNATURE	DATE	REV.	JOB NO.	DRAWING NO.
Absel			A		1

REVISION NOTES

REV	DATE	DESCRIPTION

NOTES

1. UNLESS OTHERWISE SPECIFIED DIMENSIONS ARE IN MILLIMETERS
2. ALL INSIDE BEND RADII TO BE MINIMUM.
3. REMOVE ALL BURS AND SHARP EDGES.
4. PART TO BE MANUFACTURED FROM SEPERATE SUPPLIED CAD FILES.
5. DRAWING IS FOR REFERANCE ONLY, ACTUAL FILES SUPPLIED FROM 3D ELECTRONIC DATABASE.
6. DO NOT SCALE DRAWINGS.

LEADING EDGE
SIGNAGE & GRAPHICS
www.leadingedgesigns.co.uk
01274 855850
UNIT 10B ENN INDUSTRIAL ESTATE
WORKFIELD ROAD, LIVERSEDGE, WF15 6BS

MATERIAL	PROJECTION TYPE	SCALE	PAGE SIZE
			A3

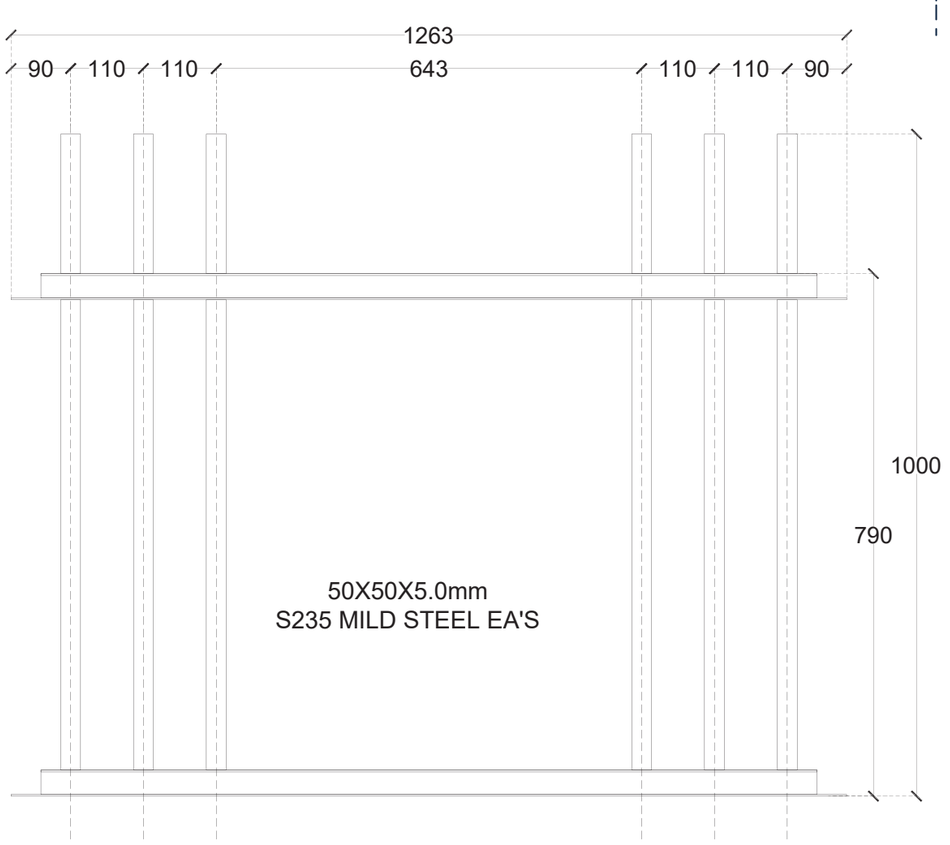

FRONT ELEVATION
SCALE 1:10

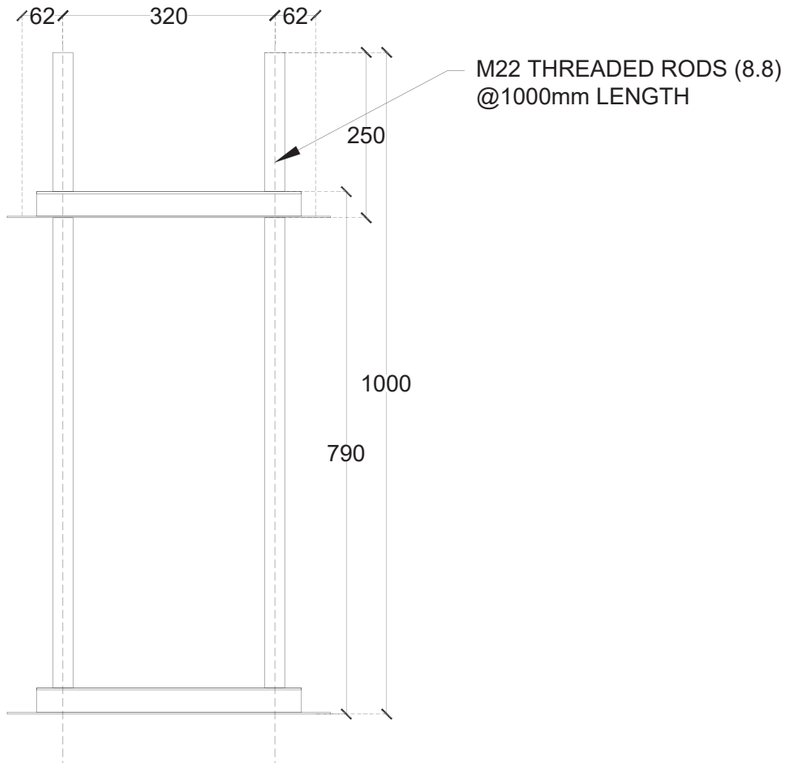

SIDE ELEVATION
SCALE 1:10

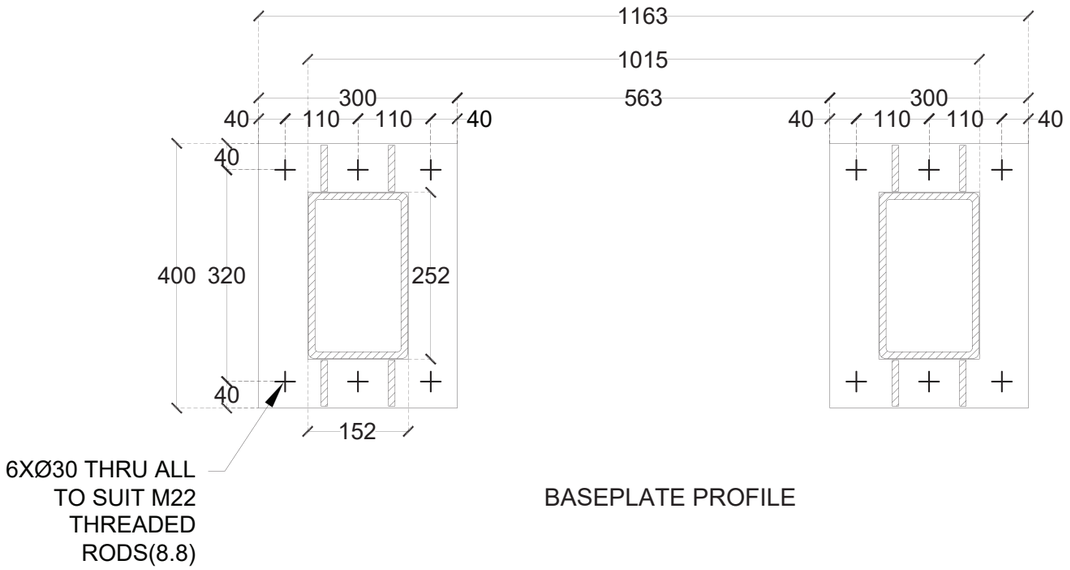

BASEPLATE PROFILE

CLIENT	PROJECT
THE GYM GROUP	THE GYM GROUP-TOTEM SIGN

DESCRIPTION

TOTEM SIGN - DETAIL DRAWING

NAME	SIGNATURE	DATE	REV.	JOB NO.	DRAWING NO.
Absel			A		2

REVISION NOTES

REV	DATE	DESCRIPTION

MATERIAL

NOTES

1. UNLESS OTHERWISE SPECIFIED DIMENSIONS ARE IN MILLIMETERS
2. ALL INSIDE BEND RADII TO BE MINIMUM.
3. REMOVE ALL BURS AND SHARP EDGES.
4. PART TO BE MANUFACTURED FROM SEPERATE SUPPLIED CAD FILES.
5. DRAWING IS FOR REFERANCE ONLY, ACTUAL FILES SUPPLIED FROM 3D ELECTRONIC DATABASE.
6. DO NOT SCALE DRAWINGS.

LEADING EDGE
SIGNAGE & GRAPHICS
01274 855850

PROJECTION TYPE	SCALE	PAGE SIZE
		A3

TOTEM DETAIL- FRONT & BACK
SCALE 1:20

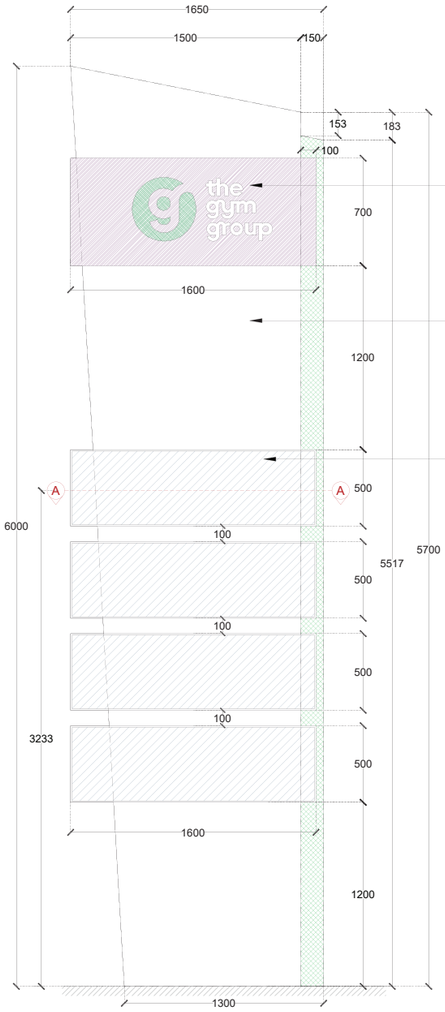

FRONT

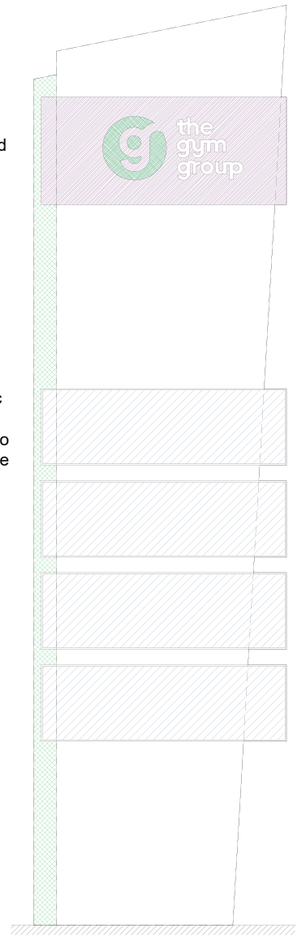

BACK

TOTEM RHS VIEW
SCALE 1: 40

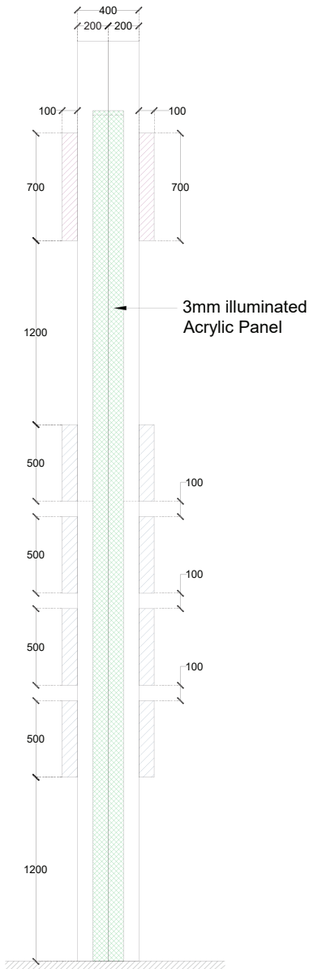

TOTEM LHS VIEW
SCALE 1: 40

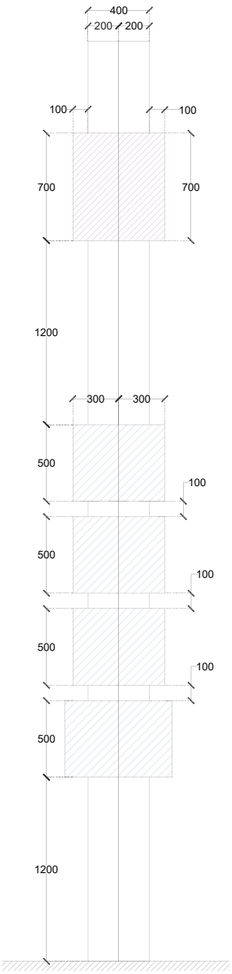

SECTION- SPLIT
SCALE 1: 40

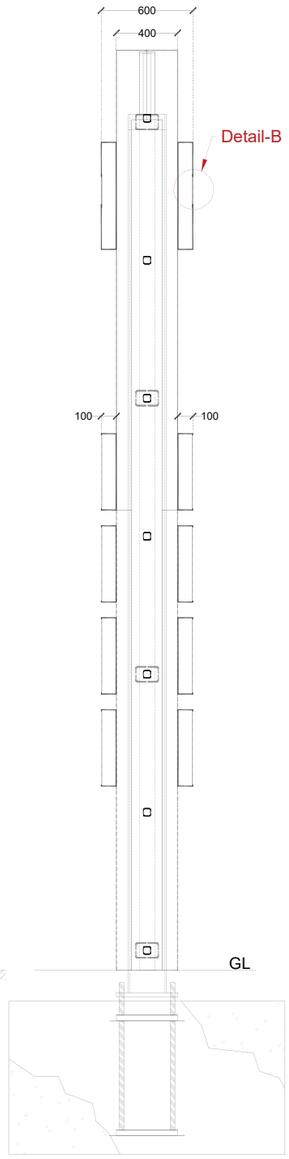

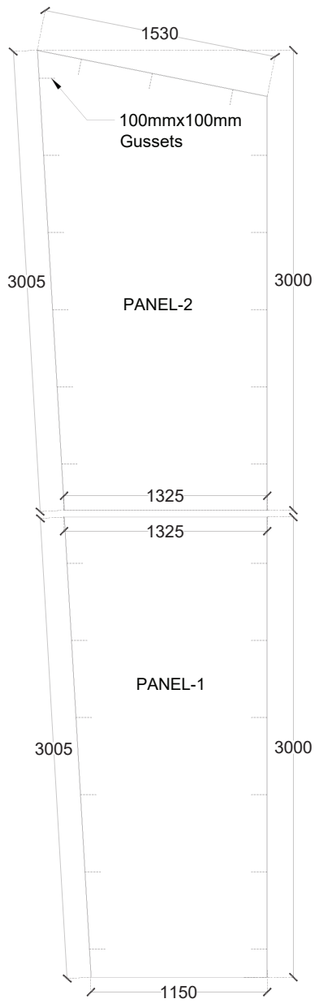

FRONT-PANELS

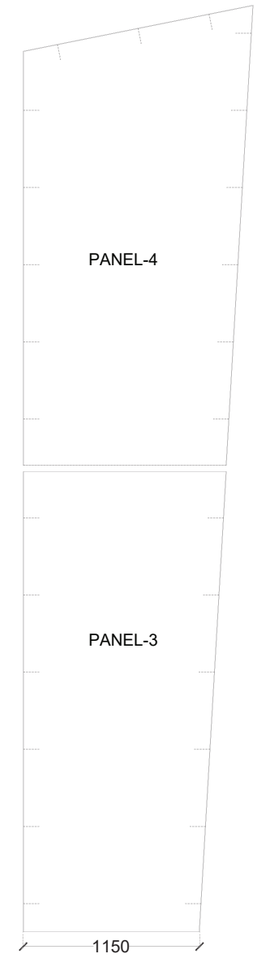

BACK-PANELS

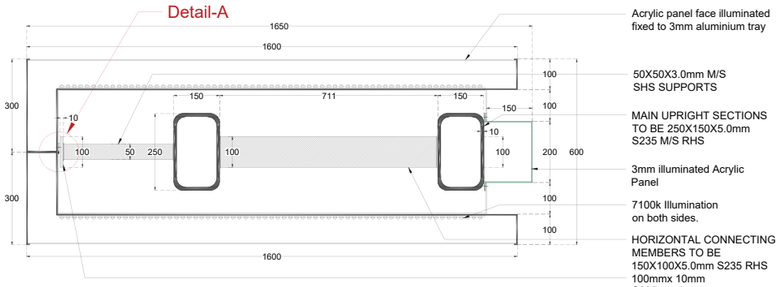

SECTION-A

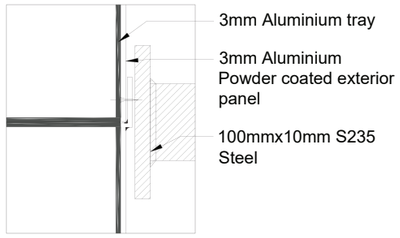

DETAIL-A

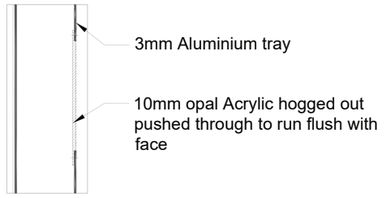

DETAIL-B

CLIENT: THE GYM GROUP		PROJECT: THE GYM GROUP-TOTEM SIGN			
DESCRIPTION: TOTEM SIGN - DETAIL DRAWING					
NAME	SIGNATURE	DATE	REV.	JOB NO.	DRAWING NO.
Absel			A		3
REVISION NOTES: REV	DATE	DESCRIPTION			
MATERIAL			PROJECTION TYPE	SCALE	PAGE SIZE
					A3

NOTES
1.UNLESS OTHERWISE SPECIFIED DIMENSIONS ARE IN MILLIMETERS
2.ALL INSIDE BEND RADII TO BE MINIMUM.
3.REMOVE ALL BURS AND SHARP EDGES.
4.PART TO BE MANUFACTURED FROM SEPERATE SUPPLIED CAD FILES.
5.DRAWING IS FOR REFERANCE ONLY, ACTUAL FILES SUPPLIED FROM 3D ELECTRONIC DATABASE.
6.DO NOT SCALE DRAWINGS.

LEADING EDGE SIGNAGE & GRAPHICS
01274 655850

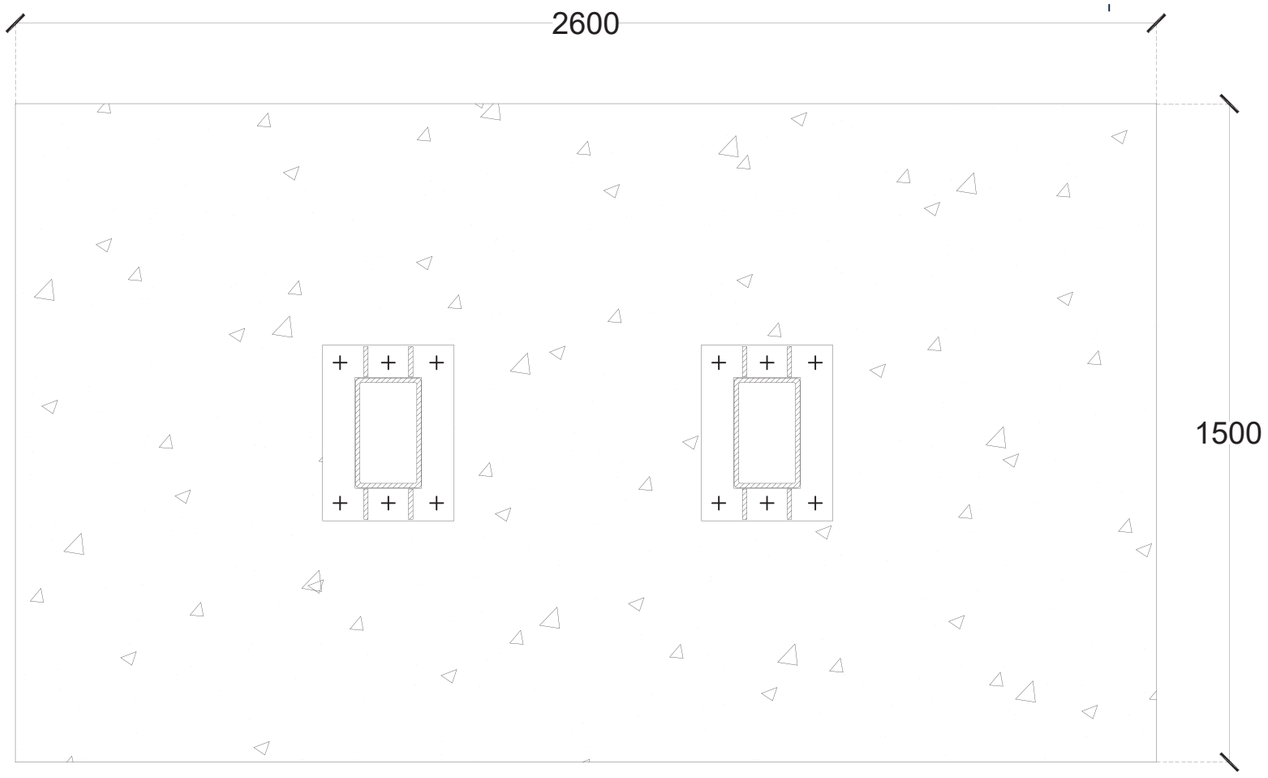

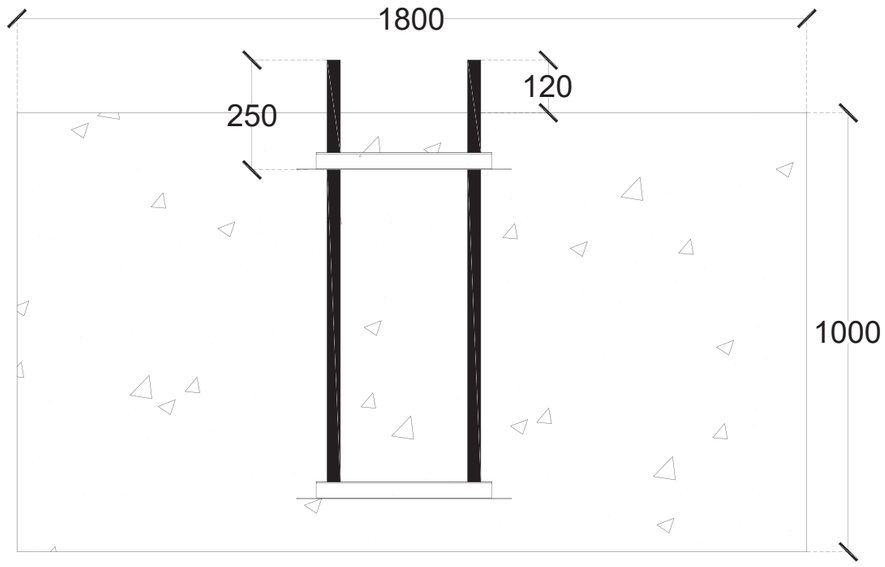

SIDE ELEVATION
SCALE 1:15

TOP ELEVATION
SCALE 1:15

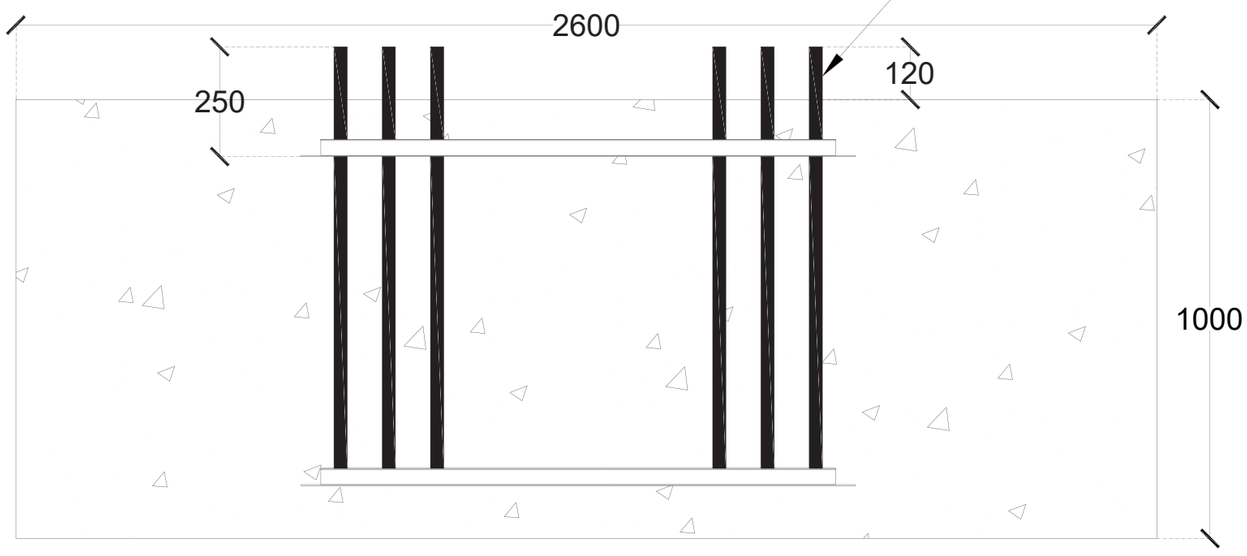

FRONT ELEVATION
SCALE 1:15

CLIENT	PROJECT
THE GYM GROUP	THE GYM GROUP-TOTEM SIGN

DESCRIPTION: TOTEM SIGN - BASE DETAIL DRAWING

NAME	SIGNATURE	DATE	REV.	JOB NO.	DRAWING NO.
Absel			A		4

REVISION NOTES

REV	DATE	DESCRIPTION

NOTES

1. UNLESS OTHERWISE SPECIFIED DIMENSIONS ARE IN MILLIMETERS
2. ALL INSIDE BEND RADII TO BE MINIMUM.
3. REMOVE ALL BURS AND SHARP EDGES.
4. PART TO BE MANUFACTURED FROM SEPERATE SUPPLIED CAD FILES.
5. DRAWING IS FOR REFERANCE ONLY, ACTUAL FILES SUPPLIED FROM 3D ELECTRONIC DATABASE.
6. DO NOT SCALE DRAWINGS.

LEADING EDGE
SIGNAGE & GRAPHICS
01274 855850
UNIT 106 EINK INDUSTRIAL ESTATE
WAKEFIELD ROAD, LIVERSEDGE, WF15 6BS

MATERIAL	PROJECTION TYPE	SCALE	PAGE SIZE
			A3