No. 00/00615/FUL
13 DEC 2000
10 NOV 2000

APPROVED UNDER
PLANNING ACTS

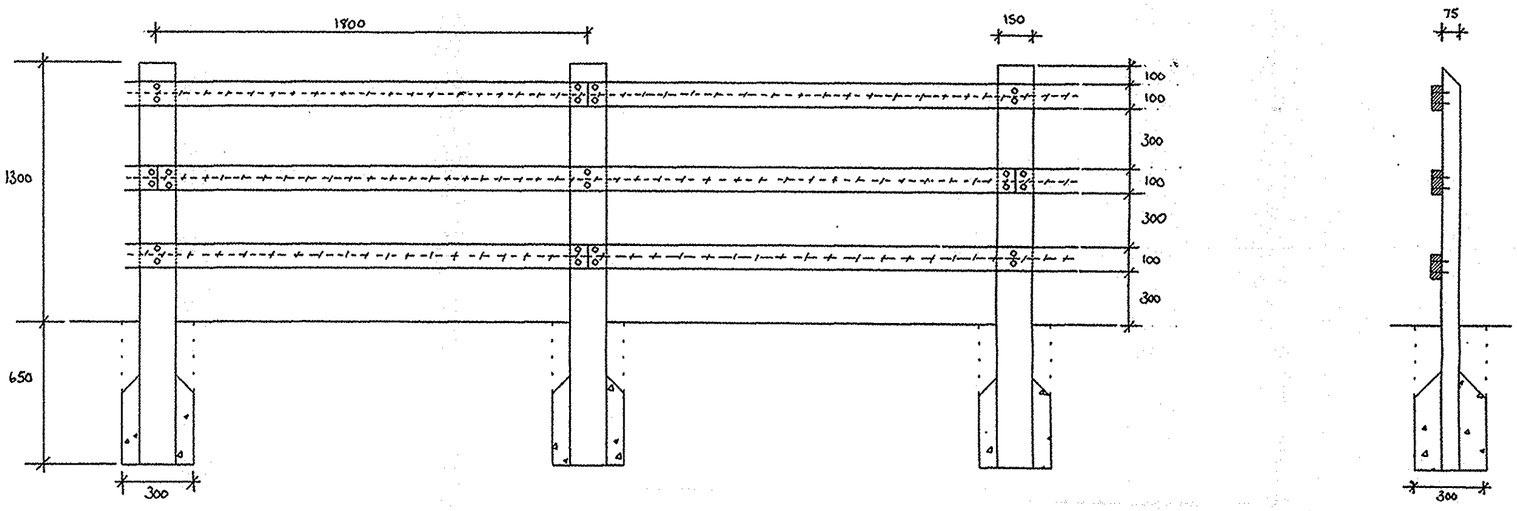

NOTES

1. ALL TIMBER IS TO BE APPROVED SOFTWOOD SAWN OR BORED AS SPECIFIED PRIOR TO BEING TREATED.

2. PRESERVATIVE TO BE COPPER / CHROME / ARSENIC. WATER BORNE TYPE TO B.S.4072 TO BE PRESSURE IMPREGNATED IN ACCORDANCE WITH B.S.5589 (1978) SECTION 6, TABLE 10, TO GIVE 40 YEARS LIFE FOR TIMBER IN CONTACT WITH THE GROUND.

3. ALL NAILS SHALL BE 100 X 5 ROUND WIRE, GALVANISED TO B.S.729.

4. POSTS SHALL BE 75 X 150 X 1950 AT A MAXIMUM OF 1800 CENTRES, WITH 50 WEATHERED TOP, SET VERTICALLY 600 IN GROUND MINIMUM HOLE 300 X 300 HALF FILLED WITH 1:10 CONCRETE AND RAMMED. WHEN HARD, BACKFILL REMAINDER WITH SOIL AND RAM.

5. RAILS SHALL BE 38 X 100, BUTT JOINTED ON CENTRE LINE OF POST, JOINTS STAGGERED AS SHOWN. TWO 100 NAILS PER STATION DRIVEN ON THE SKEW. NO END SPLITS SHALL BE PERMITTED.

6. FENCE SHALL BE ERECTED TRUE TO LINE AND THE LEVEL SHALL FOLLOW THE PROFILE OF THE GROUND.

7. END POSTS SHALL BE 150 X 150 X 1950 WHERE DIRECTED AND RAILS SHALL EITHER BE MORTICED OR LET IN FLUSH TO FACE, AS DIRECTED.

8. WEATHERED TOPS TO POSTS SHALL BE CUT ACCURATELY AND NEATLY, FREE FROM SPLITS, ROUGHNESS AND SPLINTERD EDGES. CHAIN SAWS SHALL NOT BE USED.

9. TIMBER RAILS SHALL BE WIRED USING 10SWG HIGH TENSILE STEEL GALVANISED WIRE STAPLED TO RAILS WITH 30MM X 3.55 GALVANISED STAPLES AT 100 CENTRES.

AMENDS TO LA COMMENTS.	Dec '00	A
No dimension to be scaled from this drawing © Copyright reserved	Date	Rev

TREVOR BRIDGE
associates

Landscape Architecture
Urban Design
Environmental Planning

7-9 St Michael's Square
Ashton-under-Lyne
Lancs OL6 6LF

Tel: 0161-308 3765
Fax: 0161-343-3513
E-mail: info@tbridgea.co.uk

Project
WHITEFIELD ROAD, HUYTON

MORRIS HOMES LIMITED

Title
3 RAIL FENCE

Date	Scale(s)	Dwg no	Rev
Dec 00	NTS	TBA 1	A
Dwn: JHP	Chkd:		



APPROVED UNDER PLANNING ACTS

LINE OF TREE PROTECTION IN ACCORDANCE WITH BS5837 TREES IN RELATION TO CONSTRUCTION.

SUGGESTED CLEARANCE FOR PLAY AREA AND OPEN VIEWS FOR SECURITY.

Note: Grid and levels related to O.S.

DRAINAGE
Only manholes found during the site survey are indicated on this plan. Further investigation may be required to confirm the full extent of the site drainage.

No dimensions to be scaled from this drawing (c) Copyright reserved	Date	Revision

TREVOR BRIDGE associates

Landscape Architecture
Urban Design
Environmental Planning

7-9 St Michaels Square
Ashton-under-Lyne
Lancs OL6 6LF

Tel: 0161-308 3765
Fax: 0161-343 3513
Email: info@tbridgea.co.uk

Project
ROSCOES WOOD, WHITEFIELD
HUYTON

MORRIS HOMES LIMITED

Title
TREE SURVEY

Date	Scale (s)	Drawing Number	Revision
Aug 00	1:500	1572.04	

Drawn: JHP. Checked:

4 10 00

Huyton.

PLOT A

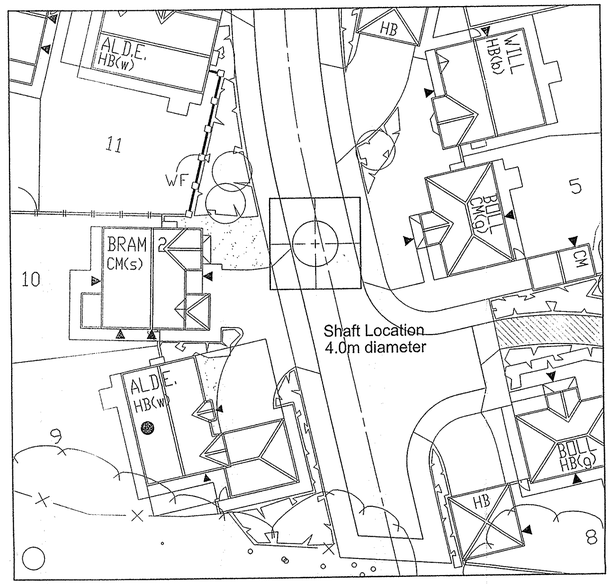

Location Plan 1:250

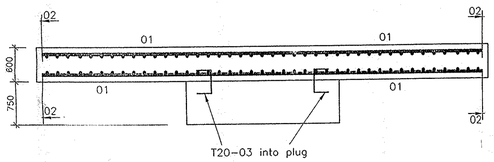

R.C. Section

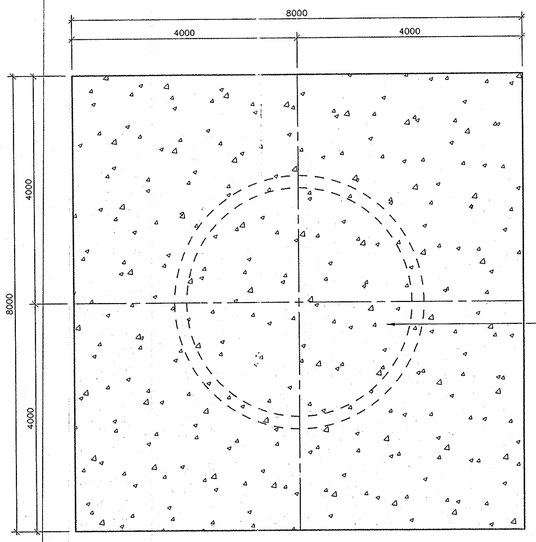

4.0m ø shaft to be filled with selected granular material to rock head level where required

G.A. Plan

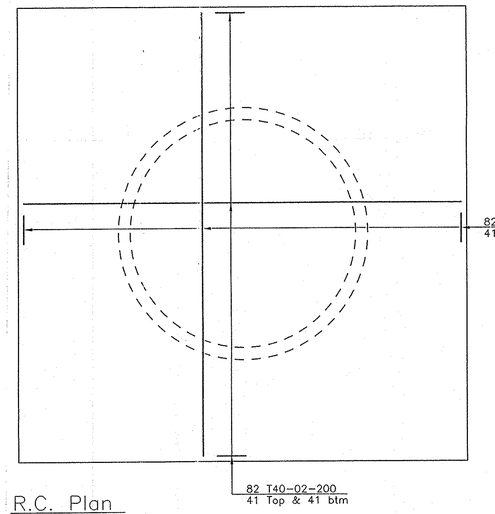

R.C. Plan

All reinforcement fixing to be inspected and approved by the Engineer prior to concreting

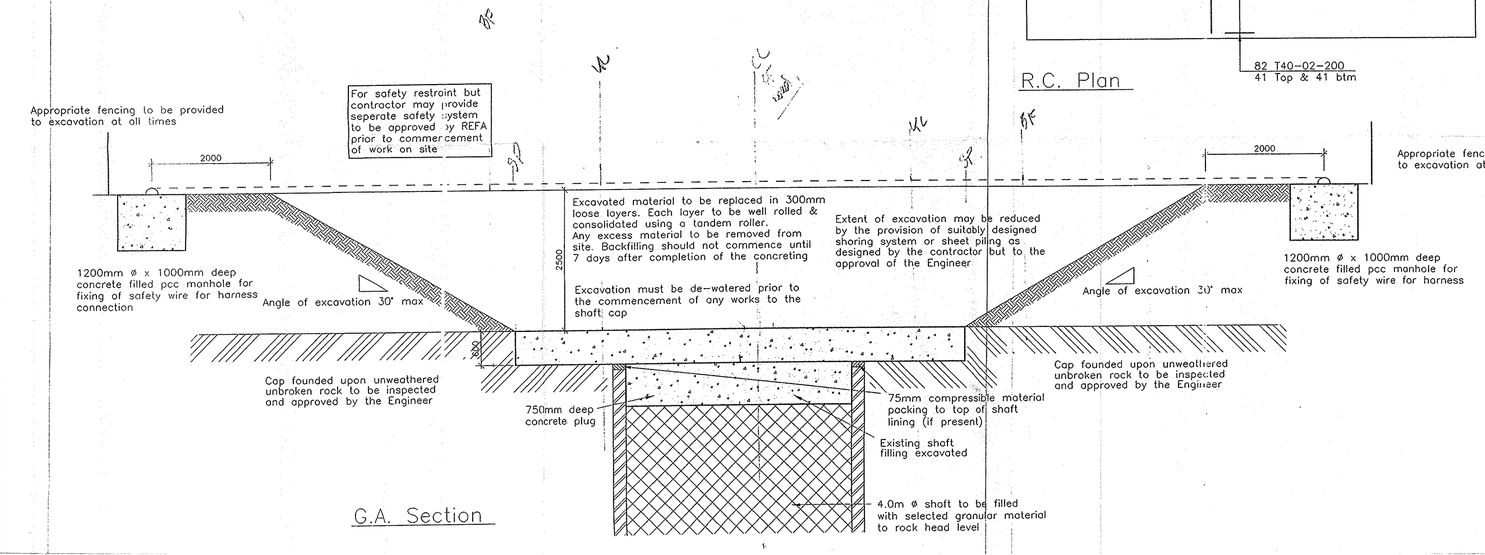

G.A. Section

C.D.M. REGULATIONS 1994

In line with the above regulations we are obliged to inform the Client of the risks that may be encountered in the construction of these works. All design work has been carried out with Health and Safety aspects given full consideration. Wherever possible risks have been eliminated from the design, however due to the very nature of this type of work it is not possible to remove all the risks from the design.
We would also respectfully remind the Client of his obligations to take all reasonable steps in ensuring that only competent Contractors who have a valid safety policy are employed.
They should also provide satisfactory responses at tender stage as to the manner in which they will deal with the elements of risk involved in this type of work and in particular those highlighted by REFA below:-

1. Excavations into embonkments and temporay support whilst works are in progress.
2. Guarding to edges of excavations to prevent people,materials and vehicles falling into excavation.
3. Guarding of excavations outside working hours to prevent unauthorised access.
4. Undermining to adjacent roads or structures.
5. Dealing with existing services.
6. All personal working over & in the vicinity of a disused mineshaft should wear approved safety harnesses, suitably anchored to safe points (Full details to be provided by contractor prior to the commencement of any works)
7. All excavation machinery to be fixed to suitable "dead man" block or fixing outside the area of the shaft using appropriate steel hauser. (Full details must be provided by contractor prior to the commencement of any works)
8. Smoking, or the use of naked flames must not be permitted in the area of the shaft.
9. Confirmation will be required that all operatives are adequately trained, copies of relevant training certificates to be supplied.
10. Procedure to be followed in event of accident or emergency.

Items 6 & 7 may be relaxed upon completion of all concreting works & after a period of curing.

The above list is by no means exhaustive but it does highlight operations that present a risk to contractors and the general public.
Certain elements may not apply in certain situations. For clarification on any item please contact REFA.

NOTES

This drwg to be read in conjunction with all relevent Architects drwgs & details.

All reinforcement to be securely fixed & be inspected & approved by the Engineer prior to placing of concrete.

Cover to reinforcement to be maintained at 100mm by use of concrete pads & mild steel choir spacers as required.

Concrete grade C35 with min. 280 Kg/m³ SRPC content & max. water : cement ratio = 0.55 with 20mm max. aggregate.

All concrete to be well vibrated to ensure optimum density. Care should be taken around all reinforcement to prevent honeycombing

Exposed surfaces of concrete should be covered with visqueen membrane or other suitable protection for a period of at least 3 days (if average temperature falls below 10°C then period must be extended). After this time formwork and protection may be removed.

Excavated material to be stored on site for reuse during backfilling

Member	Bar Mark	Type and Size	No. of mbrs	No.of bars in each	Total No.	Length of each bar † mm	shape code	A* mm	B* mm	C* mm	D* mm	E/r* mm
	01	T40	1	82	82	7800	20					
	02	T40	1	82	82	7800	20					
	03	T20	1	6	6	1000	38	300	400			

This schedule complies with the requirements of BS 4466
* Specified in multiples of 5mm † Specified in multiples of 25mm

revision suffix	Revision details	Date

Drawing Stage			Drawing Status		
	Draft		Comments		Tender
●	Issued		Information		Construction
	Preliminary	●	Approval		As Built

This drawing is not authorised unless signed as checked & approved

Client
Morris Homes Ltd

Architect

Job title
Whitefield Lane
Huyton
Merseyside

AM/00/0065/REM
rec'd 17/07/01.

Drawing title
Shaft Cap Details To Shaft To Front Of Plot 4

REFA
45, Bridgeman Terrace
Wigan, Lancs
WN1 1TT
Tel:(01942) 826020
Fax:(01942) 230816
DESIGN CONSULTANTS
ARCHITECTURAL
CIVIL• STRUCTURAL•GEOTECHNICAL

Chkd	Appvd	date	scale	drawn
		Dec 2000	1:500 & 1:50	MAJ

DRAWING No **20208/08** rev

© This drawing is the property of REFA and should not be copied, used or its contents divulged without prior written consent

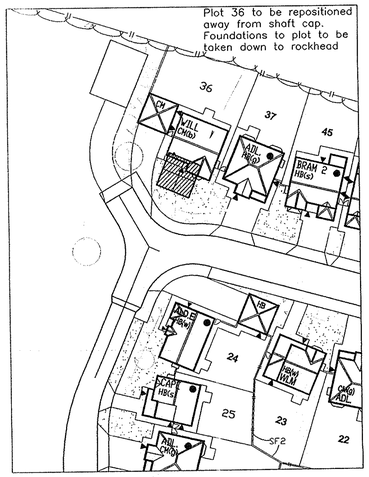

Location Plan 1:500

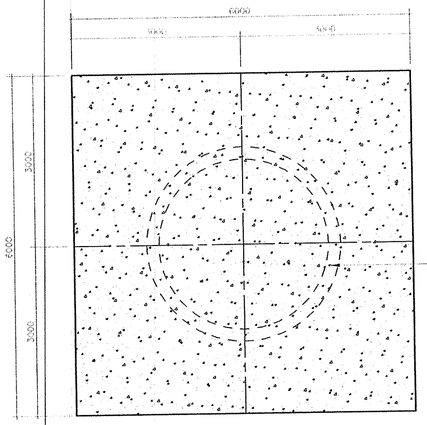

G.A. Plan

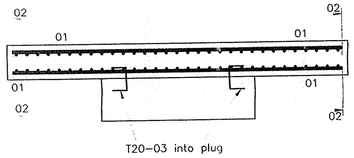

R.C. Section

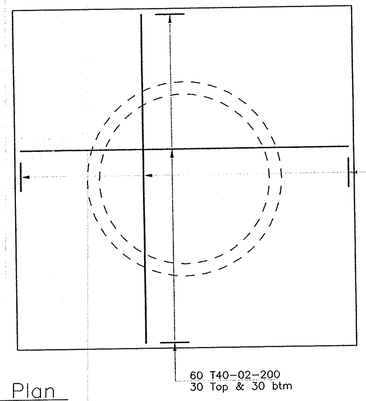

R.C. Plan

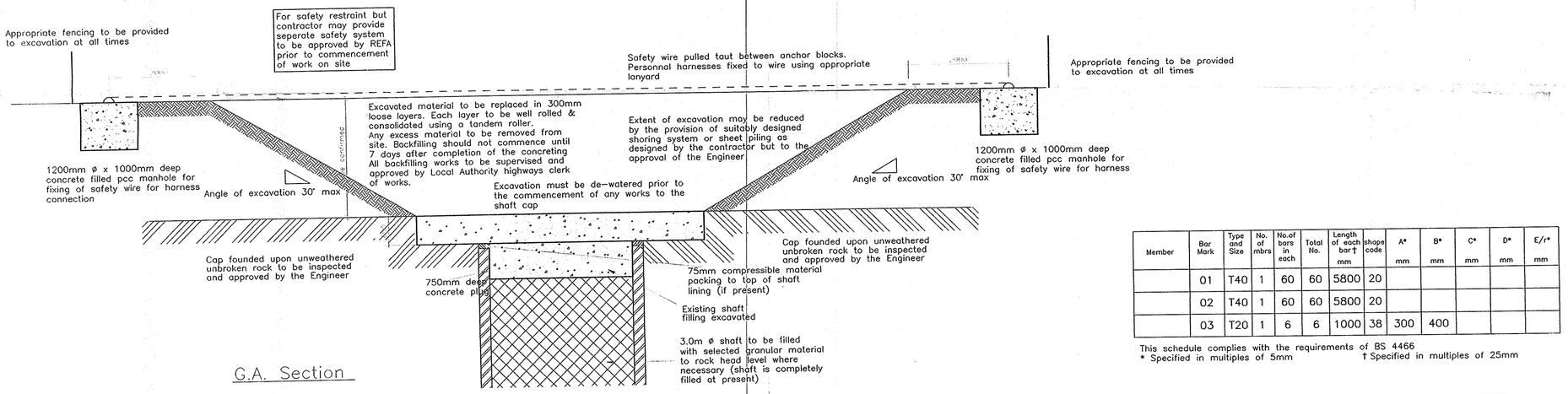

G.A. Section

Member	Bar Mark	Type and Size	No. of mbrs	No.of bars in each	Total No.	Length of each bar† mm	shape code	A* mm	B* mm	C* mm	D* mm	E/r* mm
	01	T40	1	60	60	5800	20					
	02	T40	1	60	60	5800	20					
	03	T20	1	6	6	1000	38	300	400			

This schedule complies with the requirements of BS 4466
* Specified in multiples of 5mm † Specified in multiples of 25mm

C.D.M. REGULATIONS 1994

In line with the above regulations we are obliged to inform the Client of the risks that may be encountered in the construction of these works. All design work has been carried out with Health and Safety aspects given full consideration. Wherever possible risks have been eliminated from the design, however due to the very nature of this type of work it is not possible to remove all the risks from the design.
We would also respectfully remind the Client of his obligations to take all reasonable steps in ensuring that only competent Contractors who have a valid safety policy are employed.
They should also provide satisfactory responses at tender stage as to the manner in which they will deal with the elements of risk involved in this type of work and in particular those highlighted by REFA below:-

1. Excavations into embankments and temporay support whilst works are in progress.
2. Guarding to edges of excavations to prevent people,materials and vehicles falling into excavation.
3. Guarding of excavations outside working hours to prevent unauthorised access.
4. Undermining to adjacent roads or structures.
5. Dealing with existing services.
6. All personal working over & in the vicinity of a disused mineshaft should wear approved safety harnesses, suitably anchored to safe points (Full details to be provided by contractor prior to the commencement of any works)
7. All excavation machinary to be fixed to suitable "dead man" block or fixing outside the area of the shaft using appropriate steel hauser. (Full details must be provided by contractor prior to the commencement of any works)
8. Smoking, or the use of naked flames must not be permitted in the area of the shaft.
9. Confirmation will be required that all operatives are adequately trained, copies of relevant training certificates to be supplied.
10. Procedure to be followed in event of accident or emergency.

Items 6 & 7 may be relaxed upon completion of all concreting works & after a period of curing.

The above list is by no means exhaustive but it does highlight operations that present a risk to contractors and the general public.
Certain elements may not apply in certain situations. For clarification on any item please contact REFA.

NOTES

This drwg to be read in conjunction with all relevent Architects drwgs & details.

All reinforcement to be securely fixed & be inspected & approved by the Engineer prior to placing of concrete.

Cover to reinforcement to be maintained at 100mm by use of concrete pads & mild steel chair spacers as required.

Concrete grade C35 with min. 280 Kg/m³ SRPC content & max. water : cement ratio = 0.55 with 20mm max. aggregate.

All concrete to be well vibrated to ensure optimum density. Care should be taken around all reinforcement to prevent honeycombing

Exposed surfaces of concrete should be covered with visqueen membrane or other suitable protection for a period of at least 3 days (if average temperature falls below 10°C then period must be extended). After this time formwork and protection may be removed.

Excavated material to be stored on site for reuse during backfilling

revision suffix	Revision details	Date

Drawing Stage		Drawing Status		
	Draft		Comments	Tender
●	Issued		Information	Construction
	Preliminary	●	Approval	As Built

This drawing is not authorised unless signed as checked & approved

Client
Morris Homes Ltd

Architect

Job title
Whitefield Lane
Huyton
Merseyside

Drawing title
Shaft Cap Details To Shaft To Plot 36

APP/05/0005/REM
rec'd 17/07/01.

REFA
45, Bridgeman Terrace
Wigan, Lancs
WN1 1TT
Tel: (01942) 826020
Fax: (01942) 230816
DESIGN CONSULTANTS
ARCHITECTURAL
CIVIL• STRUCTURAL•GEOTECHNICAL

Chkd	Appvd	date	scale	drawn
		May 2001	1:500 & 1:50	MAj

DRAWING No **20208/12** rev

© This drawing is the property of REFA and should not be copied, used or its contents divulged without prior written consent

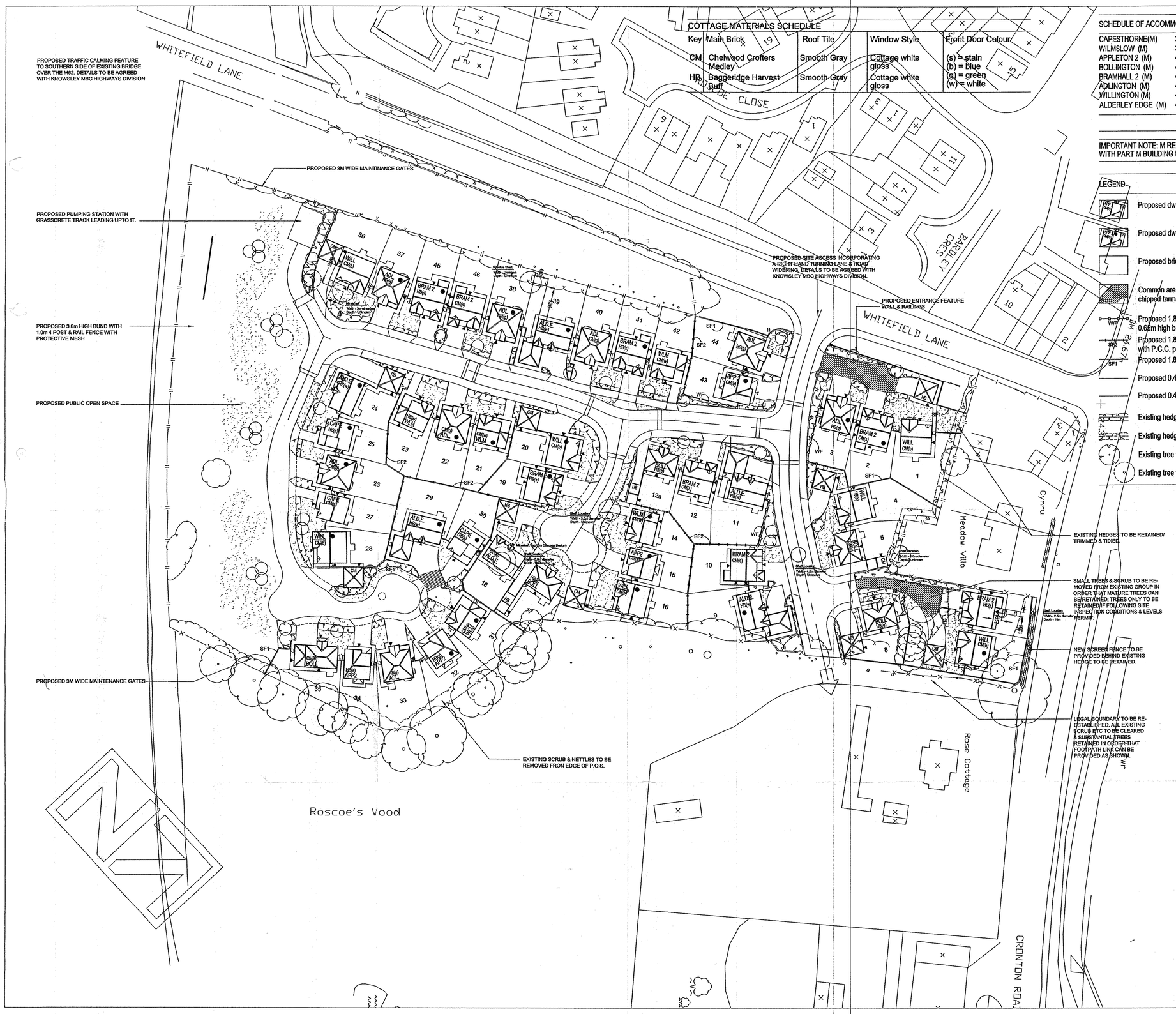

COTTAGE MATERIALS SCHEDULE

Key	Main Brick	Roof Tile	Window Style	Front Door Colour
CM	Chelwood Crofters Medley	Smooth Gray	Cottage white gloss	(s) = stain (b) = blue (g) = green (w) = white
HB	Baggeridge Harvest Buff	Smooth Gray	Cottage white gloss	

SCHEDULE OF ACCOMMODATIN

CAPESTHORNE(M)	3 bed detached house	-int' single garage	3No
WILMSLOW (M)	3 bed detached house	-int' single garage	5No
APPLETON 2 (M)	4 bed detached house	-int' single garage	4No
BOLLINGTON (M)	4 bed detached house	-det' single/double garage	5No
BRAMHALL 2 (M)	4 bed detached house	-int' single garage	8No
ADLINGTON (M)	4 bed detached house	-int' single garage	8No
WILLINGTON (M)	4 bed detached house	-det' double garage	7No
ALDERLEY EDGE (M)	4 bed detached house	-det'/linked double garage	7No
		TOTAL 56,002	46No

IMPORTANT NOTE: M REFERS TO HOUSE TYPES THAT ARE TO BE COMPLIANT WITH PART M BUILDING REGULATIONS - REFER TO SEPERATE BOOKLETS

LEGEND

- Proposed dwelling
- Proposed dwelling to be built opposite hand
- Proposed brick built garage
- Common areas of shared drives in red chipped tarmac to differentiate
- Proposed 1.8m high/0.44m square brick piers at 2.0m ctrs with 0.65m high brick dwarf wall/feather edged boarded infill panels
- Proposed 1.8m high feather edge boarded timber screen fence with P.C.C. posts & gravel boards
- Proposed 1.8m high feather edge boarded timber screen fence
- Proposed 0.45m high timber post & rail divisional fence
- Proposed 0.45m high timber 'V'-rail fence
- Existing hedge to be retained
- Existing hedge to be removed
- Existing tree to be retained
- Existing tree to be removed

Rev	Date	Amendment	Init
B	230501	Shaft to plot 36 added	NG
A	090401	Shaft to plot 18 added	NG

MORRIS HOMES

Morris Homes Limited.
Morland House, 18 The Parks,
Newton-le-Willows,
Merseyside WA12 OJQ
Tel: (01942) 272020
Fax: (01942) 725970

rec'd 17/07/01
APP/00/00615/REM.

Job. Title
WHITEFIELD LANE, HUYTON.

Drg. Title
MINESHAFT POSITIONS

date	drawn	checked	scale	drg.no	rev
22/08/00	NG		1:500	HB94_MS_01	B

JUNCTION IMPROVEMENT WORKS TO WHITEFIELD LANE TO BE CARRIED OUT UNDER SECTION 278 AGREEMENT. REFER TO SEPERATE DETAILED DESIGN DRAWINGS PRODUCED BY AMUNDSELL LTD.

EX GULLY TO BE REMOVED

EX GULLY TO BE RELOCATED

Existing pipework
New pcc manhole on existing pipework
Existing septic tank
Proposed drainage diversion

STREET NAMEPLATES

Ex F/W MH CL 22.59 IL 21.20

275 dia

Ex Foul Sewer 150 dia

Ex Water Main

F14

M62 Motorway

3045500

3045400

PROPOSED PUMPING STATION WITH GRASSCRETE TYPE HARDSTANDING TO BE LAID TO BOTTOM OF TANK

REFER TO SEPERATE DRAWS FOR PUMPING STN LAYOUT

3.0m MIN. WIDE ACCESS

100 ø PERFORATED LAND DRAIN

600mm "splashback" strip to be constructed to footpath construction including PCC edgings

FLOW CONTROL MANHOLE WITH MAXIMUM DISCHARGE 3lit/S

CATCH PIT

SOLID 100# UNDER BUND

HIGH LEVEL CONNECTIONS (150mm DIA) TO PUMPING STATION DRAWING

100 ø PERFORATED LAND DRAIN

100 DEEP COVER SLAB WITH 600 x 600 SQUARE OPENING.

CONCRETE LC CHAMBER COVER

STEP IRONS 300 VERT & HORIZ

P.C.C CHAMBER SECTIONS SEE TABLE FOR CHAMBER DIMENSIONS

40 THICK GRANO CONC BENCHING TO BE 1 IN 12 SLOPE.

Section B - B.

Y.C 1/2LF CHANNEL SECTION JUNCTIONS TO SUIT

Section C - C.

WALS INSTALLED TO SERVE POSSIBLE FUTURE DEVELOPMENT SURFACE WATER INFLOW FROM ADJACENT SITE TO BE LIMITED TO VALUE OF 10 L/Sec/Ha I.E 20 L/Sec

CLAYWARE/PLASTIC ADAPTOR TO BE LEFT OUTSIDE CHAMBER AS CLOSE AS PRACTICAL TO CHAMBER WALL BY ROAD AND SEWER CONTRACTOR

100 DIA OUTLET

DRAGOUT MANHOLE DETAIL.(NON ADOPTABLE)

CHAMBER DIMENSIONS FOR DRAGOUT MANHOLES.

DEPTH TO INVERT	LENGTH x WIDTH (mm x mm)	DIAMETER (mm)
1.5m or less	1200 x 750	1050
Over 1.5m	1200 x 750	1200
Over 2.7m	1200 x 840	1200

WHERE THE DRAGOUT COVER IS WITHIN A GARDEN AREA THE COVER SHALL BE CONCRETE BY "INSPEC" OR SIMILAR APPROVED.
WHERE THE DRAGOUT COVER IS WITHIN A TARMAC DRIVE THE COVER SHALL BE OF DUCTILE IRON GRADE B1
ALL DRAGOUTS TO BE CIRCULAR TYPE.

SURVEY STATIONS

Name	Eastings	Northings	Height
1	345595.156	389385.967	25.188
2	345542.092	389396.779	24.959
3	345520.573	389509.708	25.479
4	345606.177	389703.993	22.098
5	345629.869	389762.761	22.594
6	345467.829	389952.186	23.257
CC1	345538.830	389949.455	24.956
CC2	345513.902	389884.377	24.697
CC3	345491.664	389825.090	24.596
CC4	345473.201	389779.237	28.442

DRAINAGE
Only manholes found during the site survey are indicated on this plan. Further investigation may be required to confirm the full extent of the site drainage.

FOUL & S/W CONNECTIONS TO BE LAID TO BOUNDARY OF SITE

PIPE SIZES WITHIN MORRIS HOMES SITE DESIGNED TO CONVEY UNATTENUATED FLOW FROM UPSTREAM.
PIPES ALSO DESIGNED TO PROVIDE ON SITE ATTENUATION OF MORRIS HOMES FLOWS PENDING POSSIBLE FUTURE IMPROVEMENT WORKS ON RECEIVING CULVERTED WATERCOURSE.

BOUNDARY.

Note :
Grid and levels related to O.S.

NOTES ON SEWERS FOR ADOPTION

1. All sewerage of 150mm dia and above is proposed for adoption
2. All adoptable sewerage shall generally comply with the requirements of WIA Guide – Sewers for Adoption – 4th Edition and NWWA guidelines to SFA 4th Edition (Nov 95) and NWW Standard details for Wastewater networks
3. Sewers for adoption of nominal diameter 300mm or less shall be flexibly jointed spigot and socket extra strength Vitrified Clay (VC) pipes in accordance with BS EN 295 : 1991
   Sewers for adoption of nominal diameter 375mm or more shall be flexibly jointed Class M concrete pipes in accordance with BS 5911 : Part 100
4. All sewers for adoption with greater than 1.20 metres cover shall have Class S granular bed and surround.
5. Any sewer for adoption with less than 1.2 metres cover shall have a minimum of 150mm S14 concrete surround. Flexibility shall be maintained by the provision of Flexcell or similar approved joint filler breaks in the concrete surround at each pipe joints
6. All gully connections to adoptable sewers shall be 150mm dia
7. All connections to adoptable sewers shall be by manufactured junction pipes. Saddle connections will not be permitted.
8. On completion of the sewerage works and of the road works to base course level, the Contractor shall thoroughly clean out the newly installed sewers and shall subsequently have the sewers surveyed by CCTV by an approved specialist sub-contractor. Two copies of the sewer survey report and video tape recording of the sewers shall be submitted to Morris Homes and the Engineer on completion of the survey. Any defects in the works shall be immediately rectified by the Contractor at his own expense.
9. Where existing sewers are to be abandoned, they shall be :
   Dug up and the excavation backfilled with selected fill Type B in accordance with clause 3.3.4 of "Sewers for Adoption"

Where sewers to be abandoned run beneath proposed foundations, the method selected shall be subject to the approval of the Engineer.

C.D.M. REGULATIONS 1994

All design work has been carried out with Health and Safety aspects given full consideration. Wherever possible risks have been eliminated from the design, however due to the very nature of this type of work it is not possible to remove all the risks from the design.

The Contractor shall provide satisfactory responses of tender stage via suitable Method Statements as to the manner in which they propose to deal with the elements of risk involved in this type of work and in particular those highlighted below:–

1. ALL Trench Excavations regardless of depth.
2. Guarding to edges of excavations to prevent people,materials and vehicles falling into excavation.
3. Guarding of excavations outside working hours to prevent unauthorised access.
4. Undermining to adjacent roads or structures.
5. Confined space operations.
6. Dealing with existing services.
7. Traffic management on existing highways.
8. Procedure to be followed in event of accident or emergency.
9. Method of working where contaminated ground is present on site.
10. Confirmation will be required that all operatives are adequately trained, copies of relevant training certificates to be supplied to Morris Homes H&S Manager
11. Dealing with Existing Flows.

The above list is by no means exhaustive but it does highlight operations that present a risk to contractors and the general public.
For further information please refer to the "Designers Risk Assessment" and Health & Safety Plan

IF IN DOUBT, ASK!

PRIVATE DRAINAGE

All private drainage is to comply with Part H of the Building Regulations
All private drainage to be 100mm ø unless indicated otherwise
Dragout manhole sizes to be in accordance with table 9 in the above document

Gradients
110mm. diam. :– 1 in 80 minimum (min. of 1 W.C. connected)
150mm. diam. :– 1 in 150 minimum (min. of 5 W.C.'s connected)

Levels
10.00 denotes a foul water invert level.
10.00 denotes a surface water invert level.

- Shallow Inspection Chamber (max.457mm deep)
- Universal Inspection Chamber (max.920mm deep)
- Traditional Inspection Chamber or Dragout Manhole
- Foul Water / Combined Water Drain (private)
- Surface Water Drain (private)
- Rodding Point
- Rain Water Pipe
- Back Inlet Trapped Gully
- Soil and Vent Pipe / Rest Bend

Rev	Date	Amendment	Init
K	27.07.01	Plot 36 private drainage amended [illegible] added around bend.	S1B
J	1.6.01	As built floor levels added, plots 1, 11 [illegible] 22,23 Floor levels revised plots 21 [illegible]	gh
I	9.5.01	Revised in accord with L.A letter [illegible] /JC/PD/309	jl
H	20.4.01	Revised in accord with L.A letter [illegible] /JC/PD/309	jl
G	25.3.01	Revised to accord with planning layout [illegible]	gwh
F	7.03.01	Drainage connection from Manders Wall [illegible]	gwh
E	30.11.00	Plot drainage completed	jl
D	28.11.00	Plot drainage added to plots 1-3 & 34 [illegible]	jl
C	9.11.00	Rising main / foul outfall detailed	gwh
B	9.11.00	Culvert diversion details completed	gwh
A	22.10.00	As letter from KDC dated 22.9.00	gwh

MORRIS HOMES

Morris Homes Limited.
Morland House, 18 The Parks,
Newton-le-Willows,
Merseyside WA12 0JQ
Tel: (01942) 272020
Fax: (01942) 725970

Job. Title: Whitefield Lane, Huyton. 00/00613/pcm rec'd 01/08/01

Drg. Title: Main Drainage Layout.

date	drawn	checked	scale	drg.no	rev
04.Aug.2000	K.R.Walker		1:500	HH94_E_DL01	k

PROPOSED TRAFFIC CALMING FEATURE TO SOUTHERN SIDE OF EXISTING BRIDGE OVER THE M62. DETAILS TO BE AGREED WITH KNOWSLEY MBC HIGHWAYS DIVISION

PROPOSED PUMPING STATION WITH GRASSCRETE TRACK LEADING UPTO IT.

PROPOSED 3.0m HIGH BUND WITH 1.3m 4 POST & RAIL FENCE WITH PROTECTIVE MESH

PROPOSED PUBLIC OPEN SPACE

PROPOSED 3 POST & RAIL FENCE TO SEPERATE DETAIL

FOOTPATH BETWEEN PLOTS 28 AND 29

PROPOSED 3M WIDE MAINTENANCE GATES

PROPOSED CLOSE BOARDED TIMBER ACOUSTIC FENCE ON TOP OF PROPOSED BUNDING WHERE POSSIBLE-ALL TO PROVIDE MIN 3.0M HIGH SCREEN ABOVE F.F.L. OF PLOT 36 BETWEEN POINTS A,B AND C.

PROPOSED 3M WIDE MAINTENANCE GATES

PROPOSED CLOSE BOARDED TIMBER ACOUSTIC FENCE ON TOP OF PROPOSED BUNDING WHERE POSSIBLE-ALL TO PROVIDE MIN 3.0M HIGH SCREEN ABOVE F.F.L. OF PLOT 36 BETWEEN POINTS A,B AND C.

EXISTING SCRUB & NETTLES TO BE REMOVED FROM EDGE OF P.O.S.

PROPOSED SITE ACCESS INCORPORATING A RIGHT HAND TURNING LANE & ROAD WIDENING. DETAILS TO BE AGREED WITH KNOWSLEY MBC HIGHWAYS DIVISION

PROPOSED ENTRANCE FEATURE WALL & RAILINGS

EXISTING HEDGES TO BE RETAINED/ TRIMMED & TIDIED

SMALL TREES & SCRUB TO BE REMOVED FROM EXISTING GROUP IN ORDER THAT MATURE TREES CAN BE RETAINED. TREES ONLY TO BE REMOVED IF FOLLOWING SITE INSPECTION CONDITIONS & LEVELS PERMIT.

NEW SCREEN FENCE TO BE PROVIDED BEHIND EXISTING HEDGE TO BE RETAINED.

LEGAL BOUNDARY TO BE RE-ESTABLISHED. ALL EXISTING SCRUB ETC TO BE CLEARED & SUBSTANTIAL TREES RETAINED IN ORDER THAT FOOTPATH LINK CAN BE PROVIDED AS SHOWN.

WHITEFIELD LANE

BARNLEY CRES

CLOSE

Meadow Villa

Cymru

Rose Cottage

CRONTON ROAD

Roscoe's Wood

N

COTTAGE MATERIALS SCHEDULE

Key	Main Brick	Roof Tile	Window Style	Front Door Colour
CM	Chelwood Crofters Merley	Smooth Gray	Cottage white gloss	(s) = stain (b) = blue (g) = green (w) = white
HB	Ba geridge Harvest Buff	Smooth Gray	Cottage white gloss	

SCHEDULE OF ACCOMMODATIN

CAPESTHORNE(M)	3 bed detached house	-int' single garage	2No
WILMSLOW (M)	3 bed detached house	-int' single garage	4No
APPLETON 2 (M)	4 bed detached house	-int' single garage	5No
BOLLINGTON (M)	4 bed detached house	-det' single/double garage	5No
BRAMHALL 2 (M)	4 bed detached house	-int' single garage	7No
ADLINGTON (M)	4 bed detached house	-int' single garage	9No
WILLINGTON (M)	4 bed detached house	-det' double garage	6No
ALDERLEY EDGE (M)	4 bed detached house	-det'/linked double garage	6No
		TOTAL 53,453	44No

IMPORTANT NOTE: M REFERS TO HOUSE TYPES THAT ARE TO BE COMPLIANT WITH PART M BUILDING REGULATIONS - REFER TO SEPERATE BOOKLETS

LEGEND

- Proposed dwelling
- Proposed dwelling to be built opposite hand
- Proposed brick built garage
- Common areas of shared drives in red chipped tarmac to differentiate
- Proposed 1.8m high/0.44m square brick piers at 2.0m ctrs with 0.65m high brick dwarf wall/feather edged boarded infill panels
- Proposed 1.8m high feather edge boarded timber screen fence with P.C.C. posts & gravel boards
- Proposed 1.8m high feather edge boarded timber screen fence
- Proposed 0.45m high timber post & rail divisional fence
- Proposed 0.45m high timber 'V'-rail fence
- Existing hedge to be retained
- Existing hedge to be removed
- Existing tree to be retained
- Existing tree to be removed

Rev	Date	Amendment	Init
L	03/01/02	Footpath added between plots 28 and 29	D.M.F
K	16/07/01	Plot 36 h-type substituted due to undetected mineshaft, from Willington to Alderley Edge.	RT
J	10/04/01	Plots 18, 29 & 30 substituted for mine shaft Acoustic fence extended to motorway boundary	DMF
H	21/02/01	Plots 17 & 31 to 35 repositioned so as to increase the distance with the existing treesplot nos 37,45 & 46 corrected	GJG
G	29/01/01	Correct tree canopies added to the rear of plots 32-35 same plots re-positioned to extend garden areas	GJG
F	10/01/01	Garage to plot 5 shown attached, position of Bramhall 2 to plot 6 amended.	SJM
E	10/12/00	Planning consultation comments endorsed.	P.L.
D	28/09/00	Plot numbers amended.	P.L.
C	04/09/00	Plots 17-36 replanned	P.L.
B	04/09/00	Minor amendments/ommision of plot no.13	GJG
A	22/08/00	TRANSFERED ONTO CAD	SJM

MORR HOME

WORKING AMENDMENT

RECEIVED: 4.1.02

SUPERSEDES DWG. NO: HB94PL01 Rev K.

Job. Title

WHITEFIELD LANE, HUYTON.

Drg. Title

PLANNING LAYOUT

01942 27 20 20

date	drawn	checked	scale	drg.no	rev
22/08/00	SJM		1:500	HB94_PL_01	L