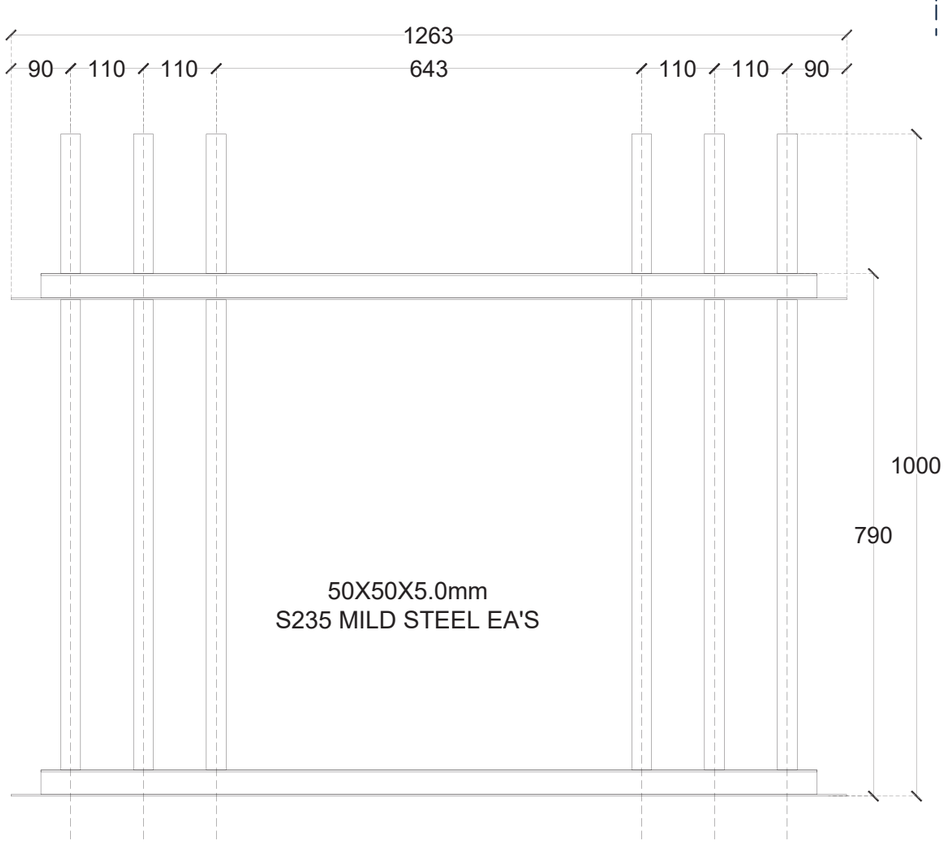

FRONT ELEVATION

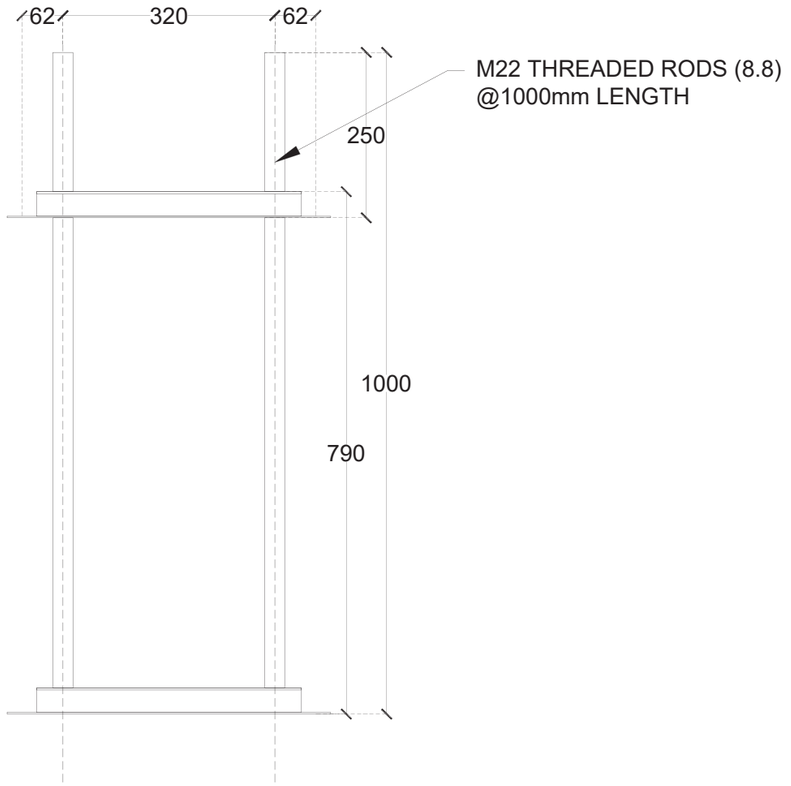

SIDE ELEVATION

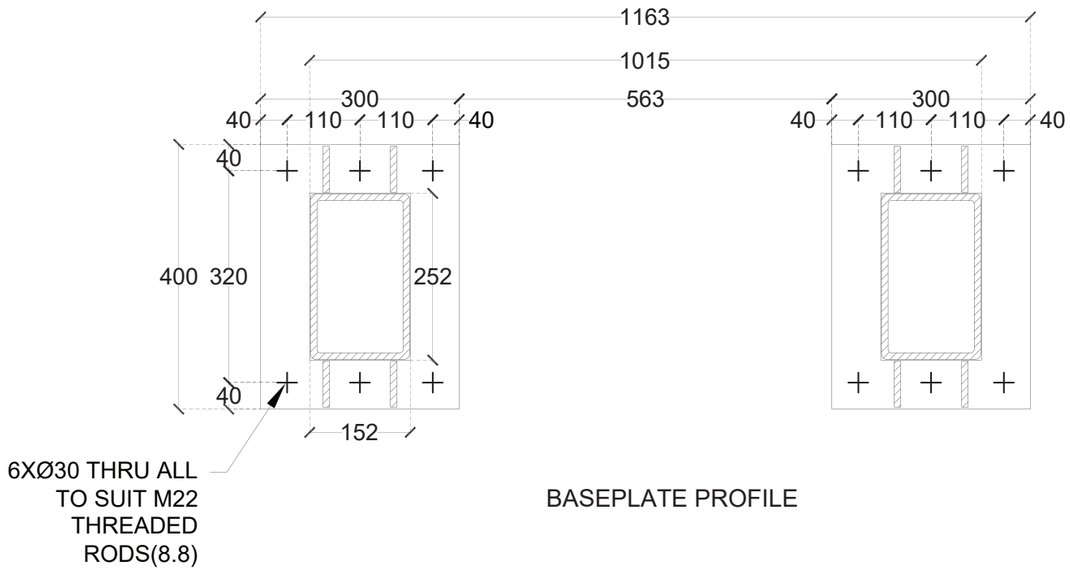

BASEPLATE PROFILE

CLIENT	PROJECT
THE GYM GROUP	THE GYM GROUP-TOTEM SIGN

DESCRIPTION

TOTEM SIGN - DETAIL DRAWING

NAME	SIGNATURE	DATE	REV.	JOB NO.	DRAWING NO.
Absel			A		2

REVISION NOTES

REV	DATE	DESCRIPTION

MATERIAL

NOTES

1. UNLESS OTHERWISE SPECIFIED DIMENSIONS ARE IN MILLIMETERS
2. ALL INSIDE BEND RADII TO BE MINIMUM.
3. REMOVE ALL BURS AND SHARP EDGES.
4. PART TO BE MANUFACTURED FROM SEPERATE SUPPLIED CAD FILES.
5. DRAWING IS FOR REFERANCE ONLY, ACTUAL FILES SUPPLIED FROM 3D ELECTRONIC DATABASE.
6. DO NOT SCALE DRAWINGS.

LEADING EDGE SIGNAGE & GRAPHICS

01274 855850

PROJECTION TYPE	SCALE	PAGE SIZE
	NTS	A3