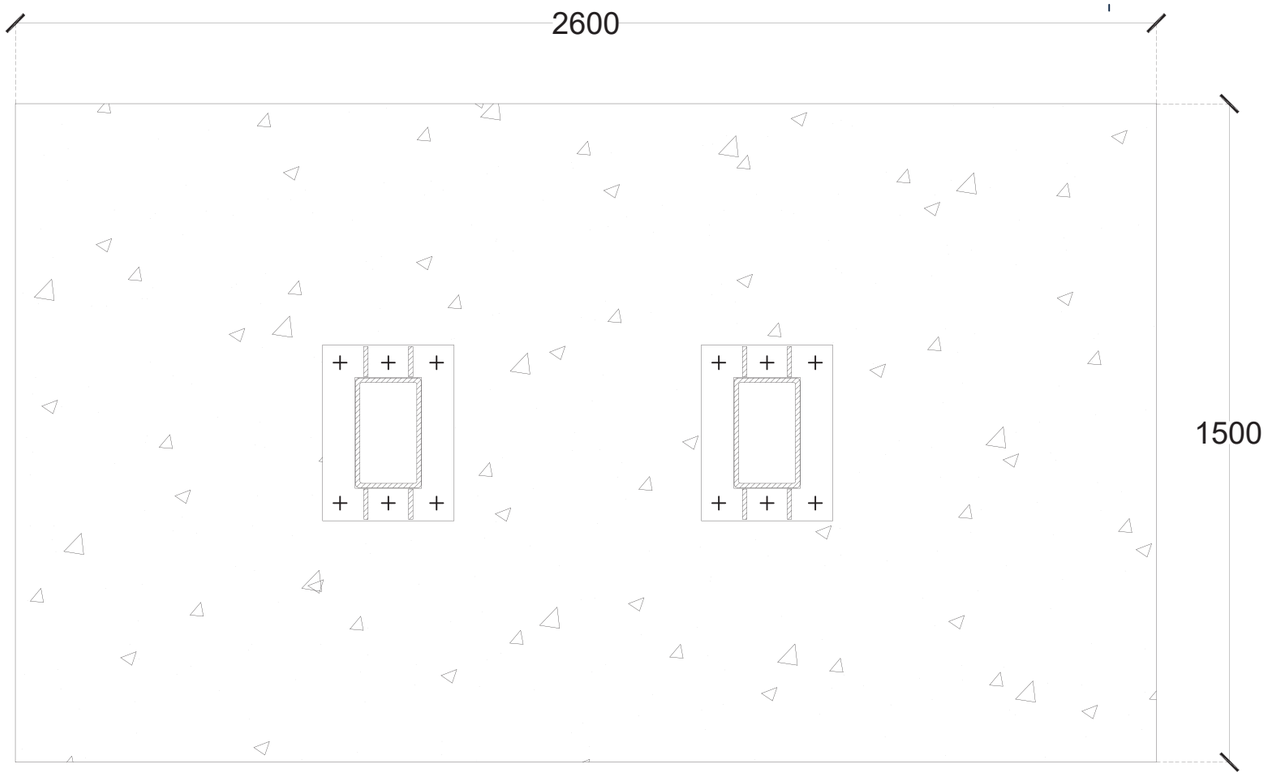

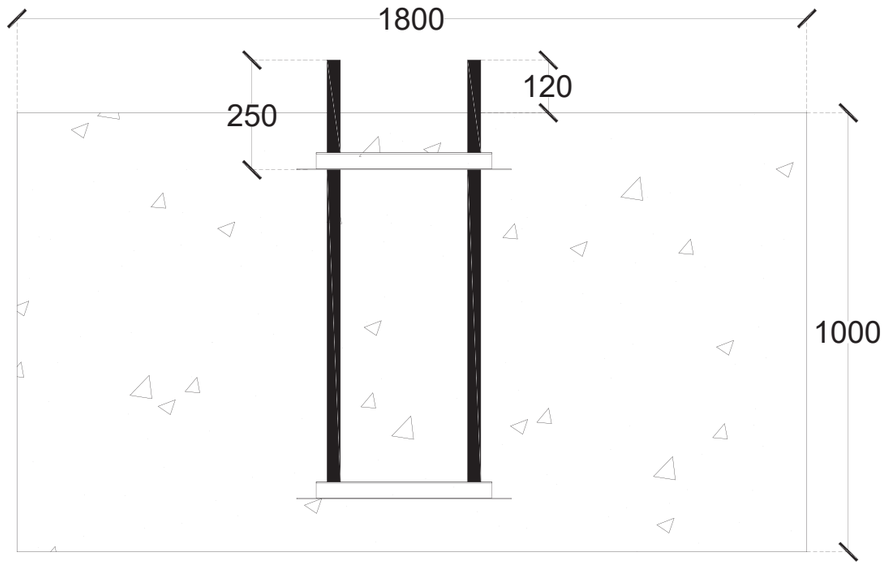

SIDE ELEVATION
SCALE 1:15

TOP ELEVATION
SCALE 1:15

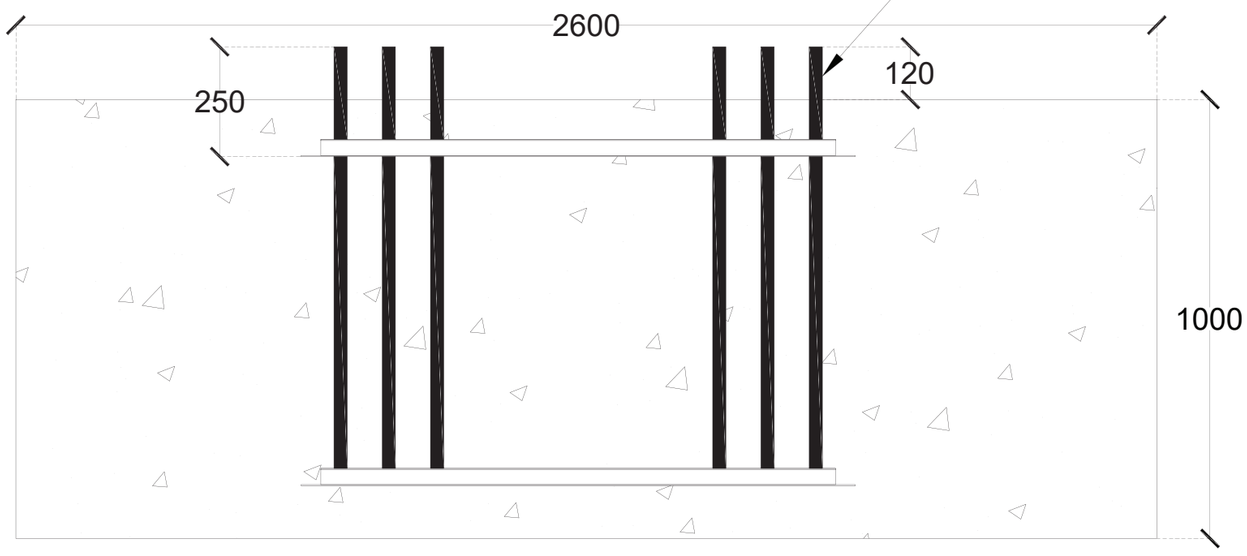

FRONT ELEVATION
SCALE 1:15

CLIENT	PROJECT
THE GYM GROUP	THE GYM GROUP-TOTEM SIGN

DESCRIPTION: TOTEM SIGN - BASE DETAIL DRAWING

NAME	SIGNATURE	DATE	REV.	JOB NO.	DRAWING NO.
Absel			A		4

REVISION NOTES

REV	DATE	DESCRIPTION

NOTES

1. UNLESS OTHERWISE SPECIFIED DIMENSIONS ARE IN MILLIMETERS
2. ALL INSIDE BEND RADII TO BE MINIMUM.
3. REMOVE ALL BURS AND SHARP EDGES.
4. PART TO BE MANUFACTURED FROM SEPERATE SUPPLIED CAD FILES.
5. DRAWING IS FOR REFERANCE ONLY, ACTUAL FILES SUPPLIED FROM 3D ELECTRONIC DATABASE.
6. DO NOT SCALE DRAWINGS.

LEADING EDGE
SIGNAGE & GRAPHICS
01274 855850
UNIT 106 EINK INDUSTRIAL ESTATE
WAKEFIELD ROAD, LIVERSEDGE, WF15 6BS

MATERIAL	PROJECTION TYPE	SCALE	PAGE SIZE
			A3